PRODUCT SELECTION AND ENGINEERING GUIDE

PLANETARY GEARHEADS • POSITION FEEDBACK TRANSDUCERS • CUSTOM ENGINEERED SOLUTIONS

Catalog No. 1000-98A

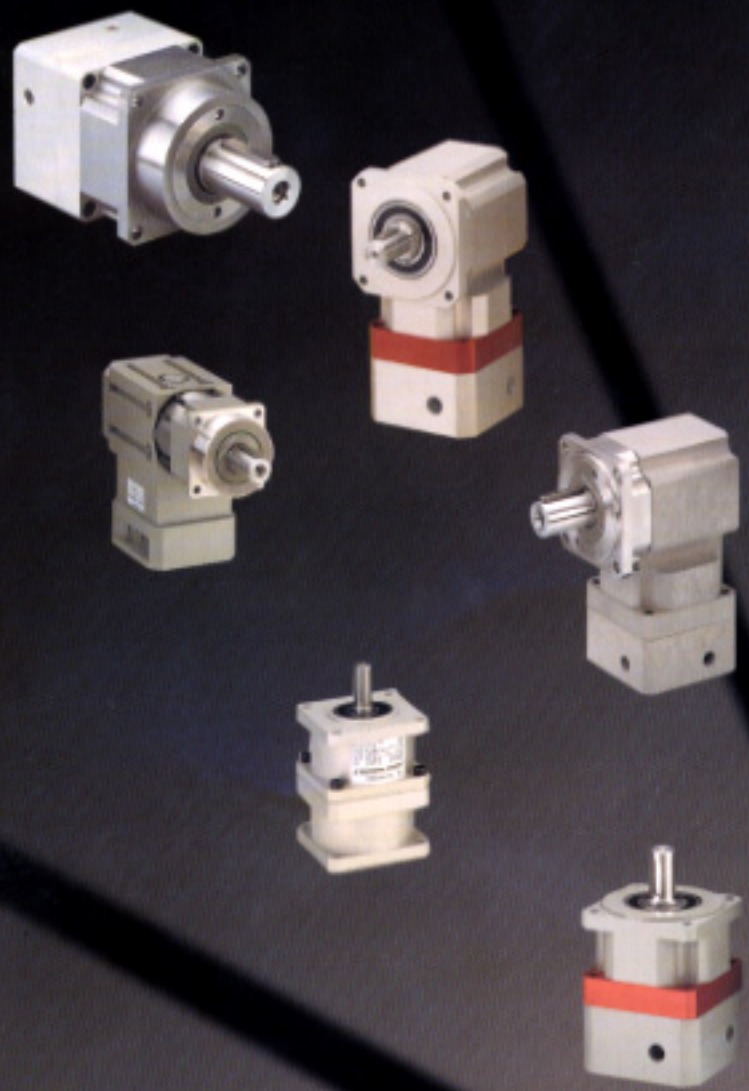

- WORLDWIDE SUPPORT
- LARGEST SELECTION
- FASTEST DELIVERY

1-888-554-MOTION

Best of the Best
GM SUPPLIER OF THE YEAR
THOMSON

THOMSON MICRON
Leading in Motion Control Technology
ISO 9000

The Thomson Industries Manufacturing Locations are ISO 9000 Certified and operate to QS-9000 Standards

TECHNICAL BULLETIN

EQ™ SERIES

Performance Benefits

Efficiency

Up to an 11% increase in gearbox efficiency over a fixed planet configuration, at 100% of rated load.

Torque Ripple

20% decrease in torque ripple (input torque variation required to drive gearhead at low speed) over a fixed planet configuration.

Noise

Average decrease of 4 dBa in transmitted noise over a fixed planet configuration. Testing was done on a sample of units at input speeds up 3,000 rpm and 75% of rated output torque.

Torque Capacity

25% increase in design life over a fixed planet configuration.

Call toll free: 1-888-554-6684

THOMSON MICRON™
Leading in Motion Control Technology

Planet gears share the load using swing links

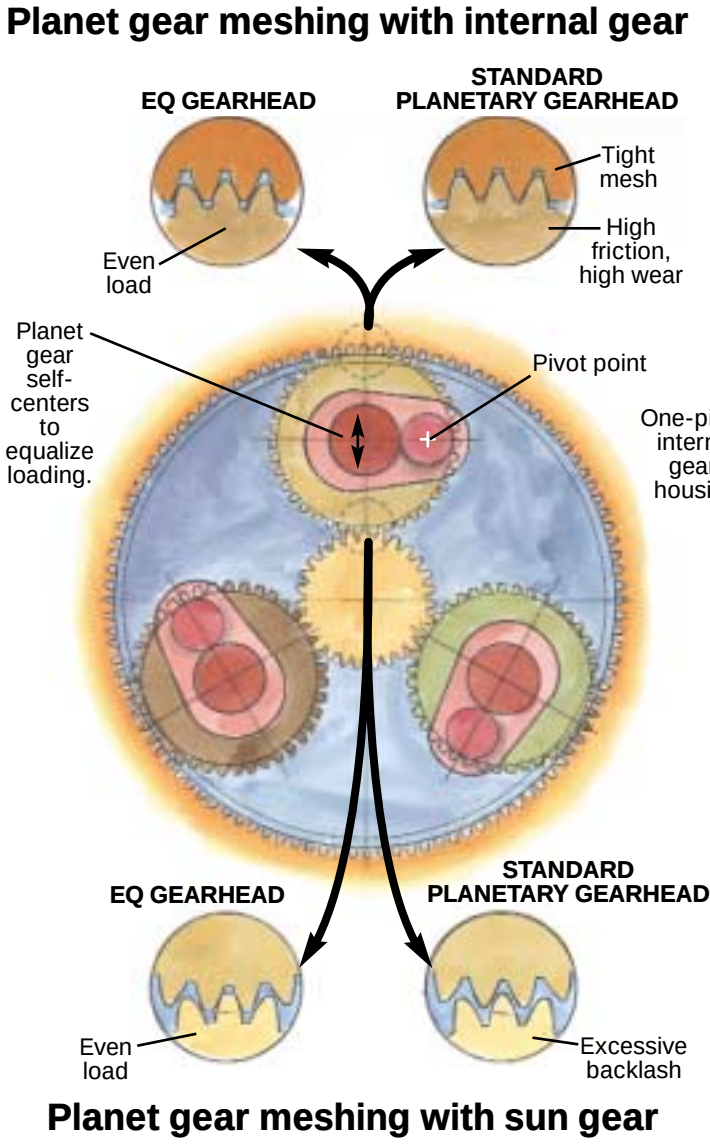

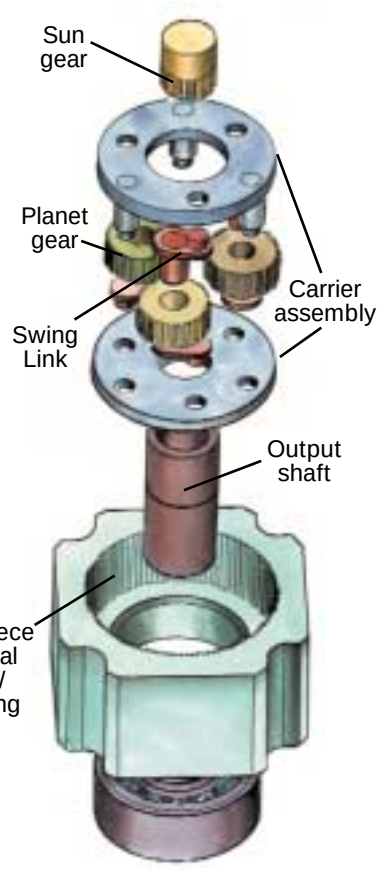

New gearheads are offered in four frame sizes (40, 60, 90, and 115 mm) with three front face mounting options (NEMA, metric, and C-Face). With these front face options, the new gearheads are said to be an easy drop-in replacement for parallel-shaft spur gearheads and other similar reducers.

The goal for engineers at Thomson Micron LLC, Ronkonkoma, N.Y., was to develop a line of low-cost planetary gearheads that perform equal to or better than current market offerings, while being compact, easy to mount, modular, and easy to produce. The result is the EQ. Key to this new line of planetary gearheads is a system in which planet gears dynamically adjust their radial position between the mating sun gear and internal gears through a pivoting link. With this "Swing-Link" technology, loads are evenly distributed through all three planet gears.

Here's how it works. Each of the three planetary gears has a swing link that essentially lets it pivot. This lets the gears mesh smoothly and reduces noise, vibration, and cyclic loading of the gear teeth.

When compared to a fixed-planet configuration, the gearheads are said to show a 3 to 11% efficiency increase as well as a 20% decrease in torque ripple—the input-torque variation that results when driving gearheads at low speeds. Moreover, tests show that the gearheads run quieter and last longer than fixed-planet gears. The EQ gearhead line, claim company officials, also offers high torque-to-envelope ratios when compared to parallel-shaft designs because the planets equally share torque. Additionally, the gearbox mounts in less then 5 min using the company's motor-mounting system.

Circle 401

EQ*Size 60mm / NEMA 23

TRUE PLANETARY* Gearhead

NEMA 23 FRAME SIZE

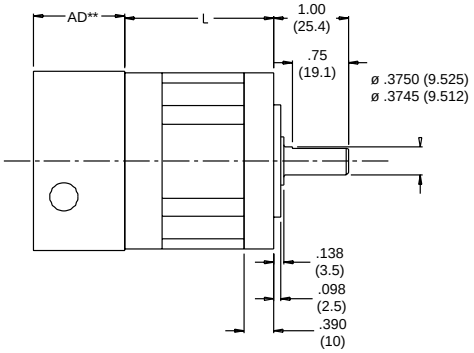

23 Frame

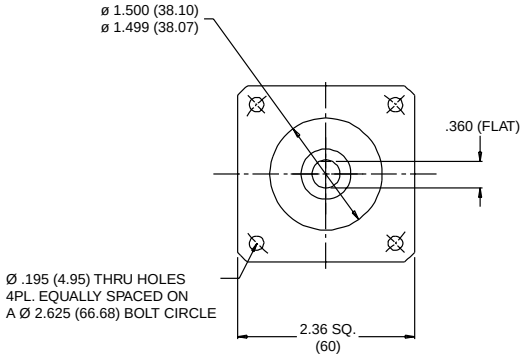

METRIC FRAME SIZES

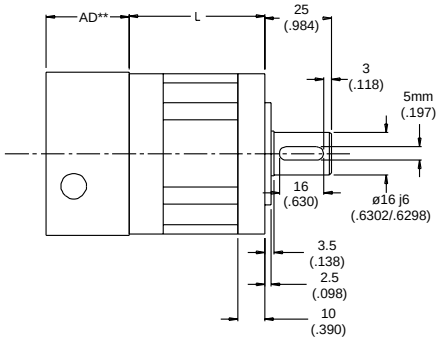

60mm Frame

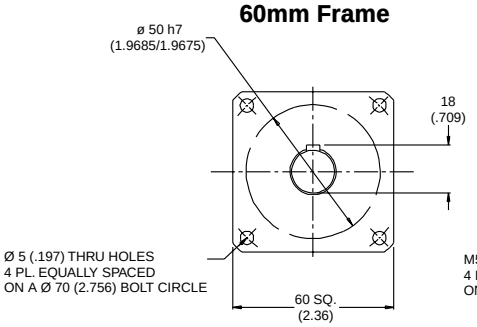

60mm C-Face

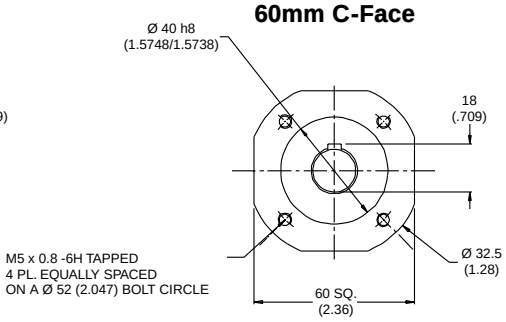

Ratio	Dimension 'L' mm *(in)*	Backlash (arc-min)	Weight kg *(lb)*	Efficiency
3:1 to 10:1	51 *(1.99)*	18 max	1.0 *(2.2)*	94%
15:1 to 100:1	70 *(2.77)*	22 max	1.2 *(2.7)*	90%

All dimensions are: mm (inches)

** AD = Adapter length. Adapter length will vary depending on motor.

PERFORMANCE SPECIFICATIONS

Part Number	Ratio[1]	10,000 HOUR LIFE T_r (1000rpm) in-lb (Nm)	T_r (3000rpm) in-lb (Nm)	T_r (5000rpm) in-lb (Nm)	T_{peak} in-lb (Nm)	J kg-cm² (in-lb-sec²x10⁴)	Torsional Stiffness Nm/arc-min (in-lb/arc-min) EQ60	EQ23
EQ60/23-003	3:1	93 (10.5)	67 (7.6)	62 (7.0)	141 (15.9)	.20 (1.80)	15.8 (1.8)	6.3 (.71)
EQ60/23-005	5:1	100 (11.3)	74 (8.4)	67 (7.6)	235 (26.6)	.13 (1.16)	15.8 (1.8)	6.3 (.71)
EQ60/23-010	10:1	60 (6.8)	51 (5.8)	49 (5.5)	235 (26.6)	.11 (.96)	15.8 (1.8)	6.3 (.71)
EQ60/23-015	15:1	118 (13.3)	100 (11.3)	95 (10.7)	260 (29.4)	.10 (.85)	15.8 (1.8)	6.3 (.71)
EQ60/23-025	25:1	160 (18.1)	119 (13.5)	100 (11.3)	260 (29.4)	.16 (1.44)	15.8 (1.8)	6.3 (.71)
EQ60/23-030	30:1	128 (14.5)	109 (12.3)	105 (11.9)	260 (29.4)	.16 (1.44)	15.8 (1.8)	6.3 (.71)
EQ60/23-050	50:1	192 (21.7)	144 (16.3)	135 (15.3)	260 (29.4)	.16 (1.44)	15.8 (1.8)	6.3 (.71)
EQ60/23-100	100:1	81 (92)	70 (7.9)	67 (7.6)	235 (26.6)	.16 (1.44)	15.8 (1.8)	6.3 (.71)

[1] Ratios are exact, other ratios are also available, consult factory.
T_{peak} = Allowable momentary peak torque for emergency stop or heavy shock loading.
J = Mass moment of inertia reflected back to the input.

THOMSON MICRON*
Leading in Motion Control Technology
☎1-888-55-4-MOTION • FAX 631-467-9814 • www.thomsonindustries.com

* Trademark of Thomson Industries, Inc. THOMSON is registered in the U.S. Patent and Trademark Office and in other countries. The specifications in this publication are believed to be accurate and reliable. However, it is the responsibility of the product user to determine the suitability of Thomson products for a specific application. While defective products will be replaced without charge if promptly returned, no liability is assumed beyond such replacement. ©2001 Thomson Micron, LLC

EQ*Size 90mm / NEMA 34

TRUE PLANETARY* Gearhead

NEMA 34 FRAME SIZE

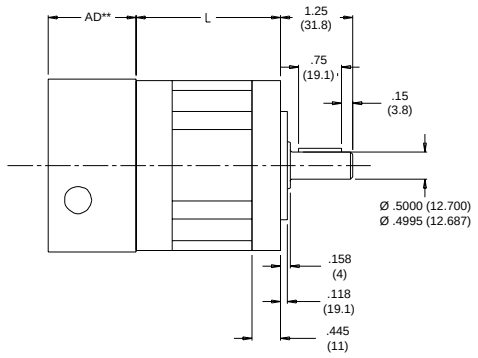

34 Frame

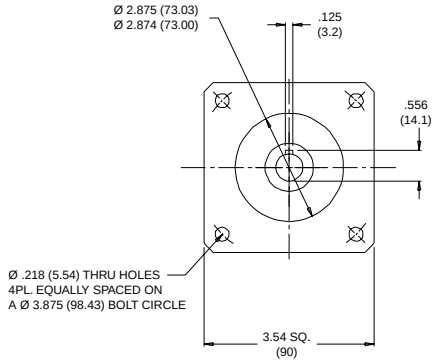

METRIC FRAME SIZES

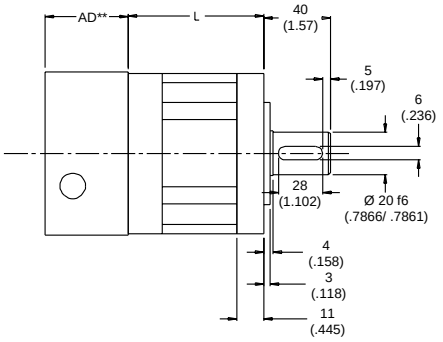

90mm Frame

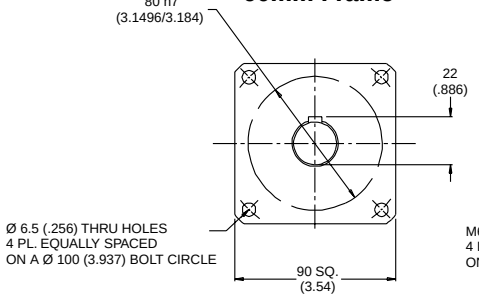

90mm C-Face

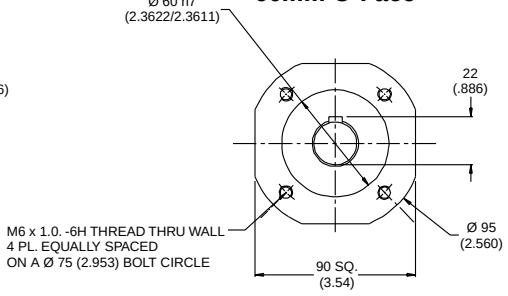

Ratio	Dimension 'L' mm *(in)*	Backlash (arc-min)	Weight kg *(lb)*	Efficiency
3:1 to 10:1	63 *(2.47)*	18 max	3.0 *(6.6)*	94%
15:1 to 100:1	90 *(3.56)*	22 max	3.7 *(8.1)*	90%

All dimensions are: mm (inches)

** AD = Adapter length. Adapter length will vary depending on motor.

PERFORMANCE SPECIFICATIONS

Part Number	Ratio[1]	10,000 HOUR LIFE T_r (1000rpm) in-lb (Nm)	T_r (3000rpm) in-lb (Nm)	T_r (5000rpm) in-lb (Nm)	T_{peak} in-lb (Nm)	J kg-cm² (in-lb-sec²x10⁴)	Torsional Stiffness Nm/arc-min (in-lb/arc-min) EQ90	EQ34
EQ90/34-003	3:1	342 (38.6)	281 (31.8)	243 (27.5)	480 (54.2)	3.9 (1.80)	48 (5.4)	16.8 (1.9)
EQ90/34-005	5:1	466 (52.7)	338 (38.2)	293 (33.1)	658 (74.4)	1.2 (.14)	48 (5.4)	16.8 (1.9)
EQ90/34-010	10:1	226 (25.5)	190 (21.5)	173 (19.5)	658 (74.4)	.66 (.075)	48 (5.4)	16.8 (1.9)
EQ90/34-015	15:1	432 (48.8)	372 (42.0)	336 (38.0)	800 (90.4)	1.2 (.14)	48 (5.4)	16.8 (1.9)
EQ90/34-025	25:1	620 (70.1)	534 (60.3)	466 (52.7)	800 (90.4)	1.2 (.14)	48 (5.4)	16.8 (1.9)
EQ90/34-030	30:1	475 (53.7)	411 (46.4)	375 (42.4)	800 (90.4)	.66 (0.75)	48 (5.4)	16.8 (1.9)
EQ90/34-050	50:1	684 (77.3)	588 (66.4)	536 (60.6)	800 (90.4)	.65 (0.74)	48 (5.4)	16.8 (1.9)
EQ90/34-100	100:1	309 (34.9)	266 (30.1)	243 (27.5)	658 (74.4)	.65 (0.74)	48 (5.4)	16.8 (1.9)

[1] Ratios are exact, other ratios are also available, consult factory.
T_{peak} = Allowable momentary peak torque for emergency stop or heavy shock loading.
J = Mass moment of inertia reflected back to the input.

THOMSON MICRON*
Leading in Motion Control Technology
☎1-888-55-4-MOTION • FAX 631-467-9814 • www.thomsonindustries.com

* Trademark of Thomson Industries, Inc. THOMSON is registered in the U.S. Patent and Trademark Office and in other countries. The specifications in this publication are believed to be accurate and reliable. However, it is the responsibility of the product user to determine the suitability of Thomson products for a specific application. While defective products will be replaced without charge if promptly returned, no liability is assumed beyond such replacement. ©2001 Thomson Micron, LLC

RADIAL LOADINGS

EQ23 RADIAL AND AXIAL LOAD RATINGS

The graph below displays the allowable radial load at a given distance (X) from the mounting surface based on on an L_{10} life of 10,000 hours for the mean output speed, $\frac{n_m}{i}$.

Allowable axial load, F_a=145 lb_f (645N) at 250 rpm

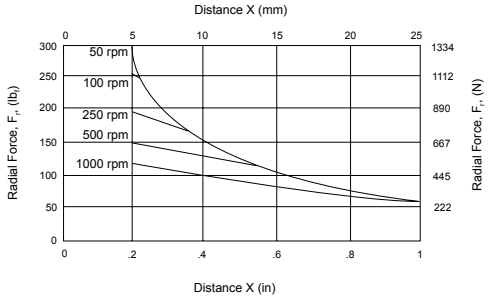

EQ34 RADIAL AND AXIAL LOAD RATINGS

The graph below displays the allowable radial load at a given distance (X) from the mounting surface based on on an L_{10} life of 10,000 hours for the mean output speed, $\frac{n_m}{i}$.

Allowable axial load, F_a=200 lb_f (890N) at 250 rpm

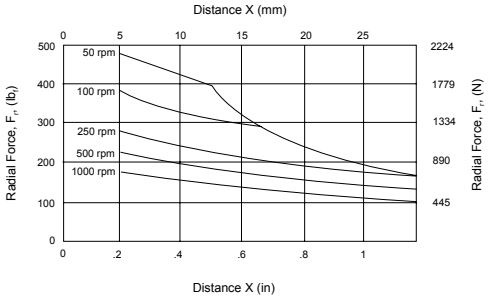

Nm = MEAN MOTOR SPEED **i = RATIO**

EQ60 RADIAL AND AXIAL LOAD RATINGS

The graph below displays the allowable radial load at a given distance (X) from the mounting surface based on on an L_{10} life of 10,000 hours for the mean output speed, $\frac{n_m}{i}$.

Allowable axial load, F_a=310 lb_f (1379N) at 250 rpm

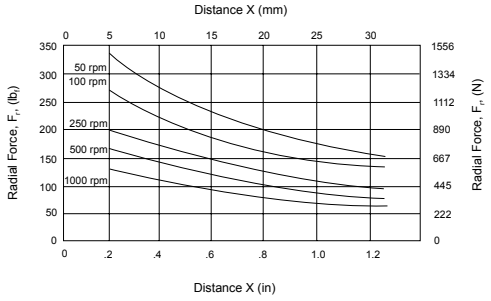

EQ90 RADIAL AND AXIAL LOAD RATINGS

The graph below displays the allowable radial load at a given distance (X) from the mounting surface based on on an L_{10} life of 10,000 hours for the mean output speed, $\frac{n_m}{i}$.

Allowable axial load, F_a=510 lb_f (2269N) at 250 rpm

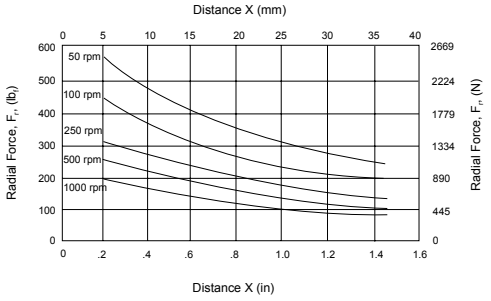

ORDERING INFORMATION

EQ 9 0 – 0 0 5 – RM 9 0 – X X

Designates EQ Frame Size

EQ23 - 23 Frame
EQ60 - 60mm Frame
EQ60C - 60mm C-Face

EQ34 - 34 Frame Size
EQ90 - 90mm Frame
EQ90C - 90mm C-Face

Gearhead Ratio

003 = 3:1	015 = 15:1
	025 = 25:1
005 = 5:1	030 = 30:1
	050 = 50:1
010 = 10:1	100 = 100:1

RediMount Frame Size

RM60 - 60mm/23 Frame
RM90 - 90mm/34 Frame

RediMount Kit Number or Motor Model Number

THOMSON MICRON*
Leading in Motion Control Technology
☎1-888-55-4-MOTION • FAX 631-467-9814 • www.thomsonindustries.com

* Trademark of Thomson Industries, Inc. THOMSON is registered in the U.S. Patent and Trademark Office and in other countries. The specifications in this publication are believed to be accurate and reliable. However, it is the responsibility of the product user to determine the suitability of Thomson products for a specific application. While defective products will be replaced without charge if promptly returned, no liability is assumed beyond such replacement. ©2001 Thomson Micron, LLC

Performance Comparison

EQ vs. Competition

Most Heavily Loaded Planetary Gear

Swing-Link technology assures equal loading of planetary gears.

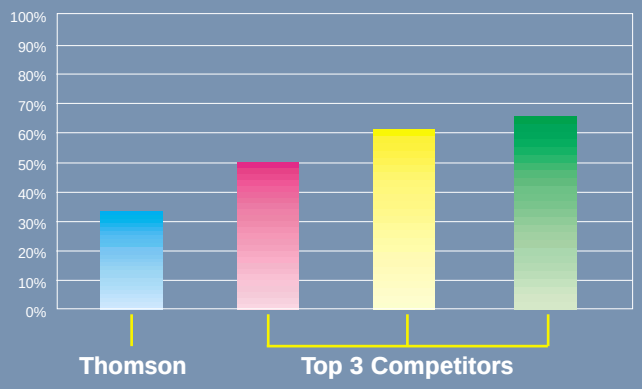

Mounting Time

Thomson Micron RediMount™ Systems mount to any servo motor in under 4 minutes.

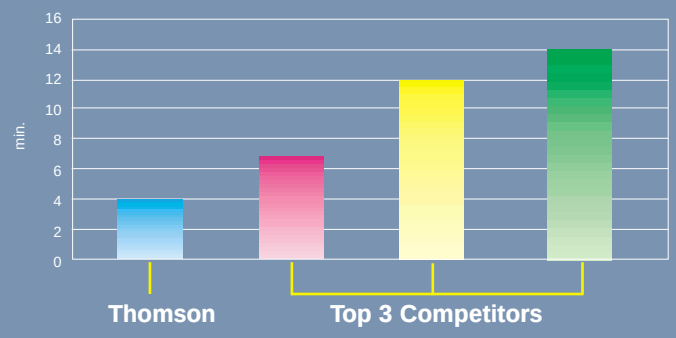

Torque Capacity

Improved load sharing boosts torque capacity.

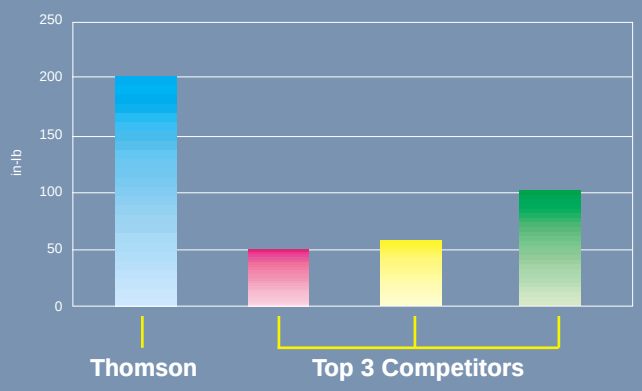

Product Value

Lowest cost per in-lb torque.

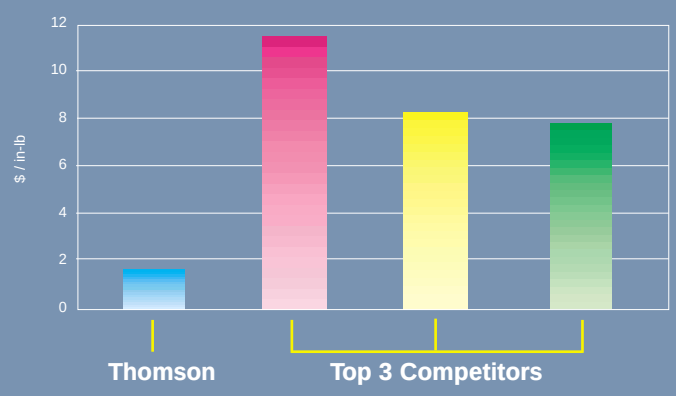

For more information or to place an order call 1-888-554-6684

Thomson Micron, LLC
50 Alexander Court
Ronkonkoma, NY 11779 USA
Phone: 1-888-554-6684
Fax: 1-631-467-9814

EUROPEAN HEADQUARTERS
Thomson IBL
Westacott Road, Barnstaple
North Devon, EX32 8TH England
Phone: + 44 1271 334 500
Fax: + 44 1271 334 502

International Phone: 631-467-8000 • International Fax: 631-467-9814 • Internet: www.thomsonindustries.com • E-mail: micron@thomsonmail.com

*Trademark of Thomson Industries, Inc. THOMSON is registered in the U.S. Patent and Trademark Office and in other countries.
©2001 Thomson Micron, LLC CG 10K 5-16-01 KP 200008-10b.qxd Lit# 10-9-0-6002

THOMSON MICRON*
Leading in Motion Control Technology

PRODUCT SELECTION GUIDE

NemaTRUE
- **Precision:** 13 arc-minutes
- **Frame Sizes:** 23, 34, and 42
- **Torque Capacity:** up to 1600 in-lb
- **Ratio Availability:** 3:1 thru 100:1
- **Radial Load Capacity:** up to 840 lb
- **Mounting System:** QuickMount*

NemaTRUE* in-line Page 13 Section 1

NemaTRUE 90
- **Precision:** 13 arc-minutes
- **Frame Sizes:** 23, 34, and 42
- **Torque Capacity:** up to 2255 in-lb
- **Ratio Availability:** 1:1 thru 500:1
- **Radial Load Capacity:** up to 650 lb
- **Mounting System:** RediMount*

NemaTRUE 90* right angle Page 19 Section 2

DuraTRUE
- **Precision:** 8 arc-minutes
- **Frame Sizes:** 60, 90, 115 and 142mm
- **Torque Capacity:** up to 7377 in-lb
- **Ratio Availability:** 3:1 thru 100:1
- **Radial Load Capacity:** up to 2500 lb
- **Mounting System:** RediMount*

DuraTRUE* in-line Page 25 Section 3

DuraTRUE 90
- **Precision:** 8 arc-minutes
- **Frame Sizes:** 60, 90, 115 and 142mm
- **Torque Capacity:** up to 7450 in-lb
- **Ratio Availability:** 1:1 thru 500:1
- **Radial Load Capacity:** up to 2500 lb
- **Mounting System:** RediMount*

DuraTRUE 90* right angle Page 31 Section 4

AccuTRUE
- **Precision:** 6 arc-minutes
- **Frame Sizes:** 60, 75, 100, 140 and 180mm
- **Torque Capacity:** up to 27,444 in-lb
- **Ratio Availability:** 3:1 thru 100:1
- **Radial Load Capacity:** up to 7500 lb
- **Mounting System:** AccuMount*

AccuTRUE* in-line Page 43 Section 5

AccuTRUE 90
- **Precision:** 6 arc-minutes
- **Frame Sizes:** 60, 75, 100, and 140mm
- **Torque Capacity:** up to 16,514 in-lb
- **Ratio Availability:** 3:1 thru 100:1
- **Radial Load Capacity:** up to 5650 lb
- **Mounting System:** AccuMount*

AccuTRUE 90* right angle Page 51 Section 6

UltraTRUE
- **Precision:** 4 arc-minutes
- **Frame Sizes:** 60, 75, 100, 140 and 180mm
- **Torque Capacity:** up to 29,201 in-lb
- **Ratio Availability:** 4:1 thru 100:1
- **Radial Load Capacity:** up to 8500 lb
- **Mounting System:** RediMount*

UltraTRUE* in-line Page 57 Section 7

UltraTRUE 90
- **Precision:** 4 arc-minutes
- **Frame Sizes:** 60, 75, 100, 140 and 180mm
- **Torque Capacity:** up to 27,532 in-lb
- **Ratio Availability:** 1:1 thru 50:1
- **Radial Load Capacity:** up to 8500 lb
- **Mounting System:** RediMount*

UltraTRUE 90* right angle Page 63 Section 8

***Trademark of Thomson Industries, Inc. THOMSON is registered in the U.S. Patent and Trademark Office and in other countries.**

PowerTRUE 90
Replacement for Belt and Pulley applications
- **Precision:** 6 arc-minutes
- **Frame Sizes:** 60, 75, 100, 140 and 180mm
- **Torque Capacity:** up to 16,914 in-lb
- **Ratio Availability:** 1:1 thru 5:1
- **Radial Load Capacity:** up to 7500 lb
- **Mounting System:** RediMount*

PowerTRUE 90* right angle Page 71 Section 9

AccuLOCK - Zero Backlash
Flexible Steel Bellows Coupling

- **Bore Range:** 9 thru 50mm
- **Torque Capacity:** up to 5310 in-lb
- **Available** in 6 sizes for immediate delivery

AccuLOCK* Bellows Coupling Page 77 Section 10

TORQUE WRENCHES
Ensure Proper Clamping force from pinion to motor shaft
- **Available for:**
  QuickMount*
  AccuMount* and
  RediMount* Motor Mounting Systems

Torque Wrenches Page 80 Section 11

PROGRAMMABLE LIMIT SWITCHES
Fully Adjustable Multiturn Rotary Switches
- **Precision:** ±.001 revs
- **Frame Sizes:** 2.5" and 3.5"
- **Range:** 512 to 2048 turns
- **Nema** 12 enclosure

Programmable Limit Switches Page 81 Section 12

Custom Engineered Products
Complete Engineered Solutions
- **Servo Actuated Solutions**
- **High Volume, Low Cost**
- **State of the art low noise gear manufacturing**

Custom-Engineered Products Page 86 Section 13

Contact Thomson Micron at:
1-888-55-4-MOTION
to receive your free:
- **DXF Files**
- **Motor Mounting Catalog**
- **Applications Engineering Assistance**

Visit us on the Internet at:
http://www.thomsonindustries.com
or e-mail us at:
micron@thomsonmail.com

THOMSON MICRON™
Leading in Motion Control Technology

*Trademark of Thomson Industries, Inc. THOMSON is registered in the U.S. Patent and Trademark Office and in other countries.

2-6-98 HAP TOC.QXD

True Planetary Gearheads offer. . .*

UltraTRUE output cage assembly*

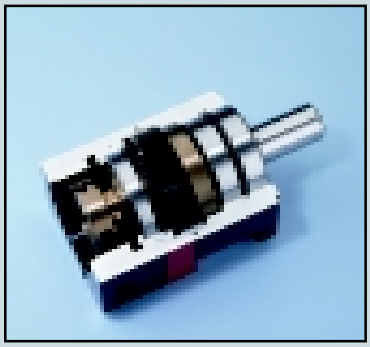

DuraTRUE in-line planetary gearhead*

DuraTRUE 90 right angle planetary gearhead*

- **High Torque to Size Ratio** - allows compact design
- **Low Backlash** - eliminates positioning errors due to lost motion
- **Inertia Matching** - keeps servo system stable and in control
- **High Rigidity** - optimizes system response
- **Self Re-lubrication** - eliminates costly maintenance and downtime
- **High Radial Load Capacity** - mount pulleys and pinions directly on the output shaft

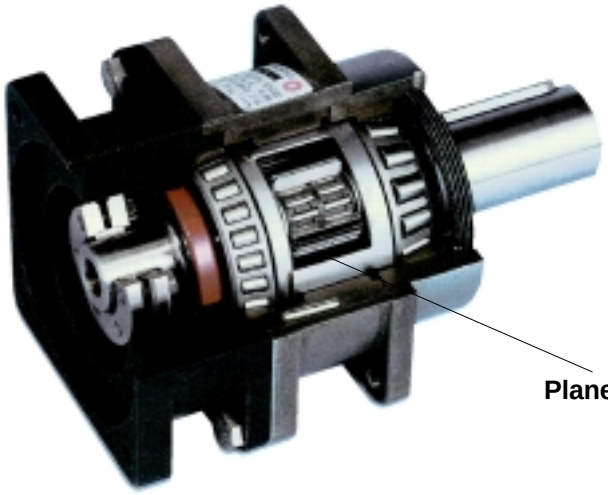

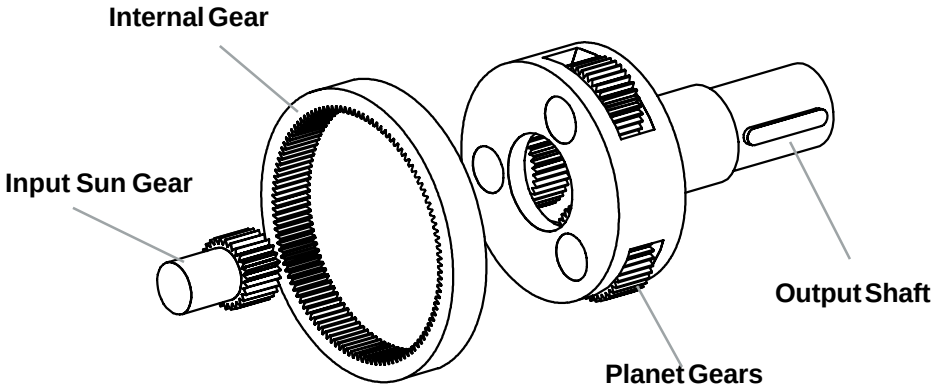

Product Feature	Gearhead								
	NemaTRUE*	NemaTRUE 90*	DuraTRUE*	DuraTRUE 90*	AccuTRUE*	AccuTRUE 90*	PowerTRUE 90*	UltraTRUE*	UltraTRUE 90*
True Planetary gearing	●	●	●	●	●	●		●	●

THOMSON MICRON
Leading in Motion Control Technology
☎1-888-55-4-MOTION•FAX 516-467-9814•www.thomsonindustries.com

The specifications and data in this publication are believed to be accurate and reliable. However, it is the responsibility of the product user to determine the suitability of Thomson Micron products for a specific application. While defective products will be replaced without charge if promptly returned, no liability is assumed beyond such replacement. © 1998 Thomson Micron, LLC
* Trademark of Thomson Industries, Inc. THOMSON is registered in the U.S. Patent Office and in other countries.

Helical Crowned True Planetary Gearheads offer.....*

- **High Torque Capacity**
- **Low Backlash**
- **Smooth Operation**
- **Greater Load Sharing**
- **Whisper Quiet**

Output housing and helical internal gear are machined from a single piece of high strength steel

Helical gears are known for their quiet and smooth operation along with their ability to transmit higher loads than spur gears. Both of these features of helical gearing result from the improved contact ratio (effective teeth in mesh) over spur gears.Crowning is a modification to the gear tooth profile which optimizes gear mesh alignment. It also enhances distribution of loading on the tooth flank, thereby reducing high stress regions which can result in surface pitting.

Spur vs. Helical Gearing

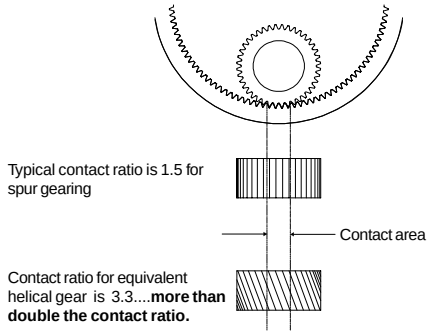

The Contact ratio is defined as the number of teeth in mesh at any given time. The higher the contact ratio, the higher the torque rating of the gearing. **Helical gearing has more than 2X the contact ratio of spur gearing.**

Crowned vs. Non-crowned

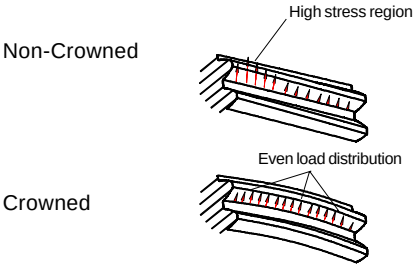

Crowning optimizes the gear mesh alignment within a gear train to increase the torque capacity and reduce noise. It also enhances load distribution on the tooth flank to reduce high stress regions.

Product Feature	Gearhead								
	NemaTRUE*	NemaTRUE 90*	DuraTRUE*	DuraTRUE 90*	AccuTRUE*	AccuTRUE 90*	PowerTRUE 90*	UltraTRUE*	UltraTRUE 90*
Helical Crowned gearing								✓	✓

UltraTRUE in-line planetary gearhead*

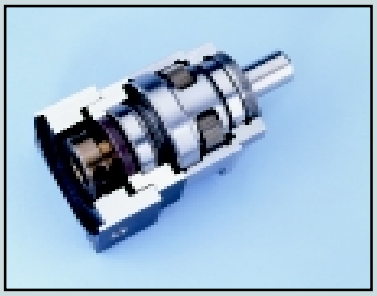

Planetary gearheads are often selected for high precision motion control applications which require a high torque to volume ratio, high torsional stiffness and low backlash. Until now, these attributes have been sufficient to meet the requirements of the market. Thomson Micron has designed a high torque, whisper quiet helical gearhead to meet the recent improvements in servo motor technology. Thomson Micron engineers accomplished this by combining the positive attributes of gear crowning and helical gearing with the planetary construction to create the smoothest operating gearhead on the market.

UltraTRUE 90 right angle planetary gearhead*

The specifications and data in this publication are believed to be accurate and reliable. However, it is the responsibility of the product user to determine the suitability of Thomson Micron products for a specific application. While defective products will be replaced without charge if promptly returned, no liability is assumed beyond such replacement. © 1998 Thomson Micron, LLC
* Trademark of Thomson Industries, Inc. THOMSON is registered in the U.S. Patent Office and in other countries.

THOMSON MICRON*
Leading in Motion Control Technology
☎1-888-55-4-MOTION•FAX 516-467-9814•www.thomsonindustries.com

PowerTRUE Right Angle Gearheads offer.....*

- **Lower backlash accomplished through single axis mesh adjustment**
- **A compact right angle design utilizing a high-tech face gear**
- **Whisper quiet operation due to high contact ratio**
- **Mesh ratios from 1:1 to 5:1**
- **98% efficiency**

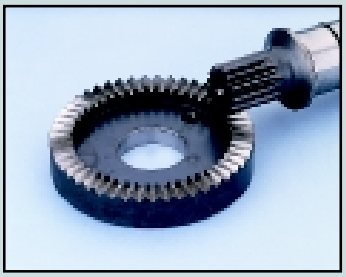

PowerTRUE right angle gearset*

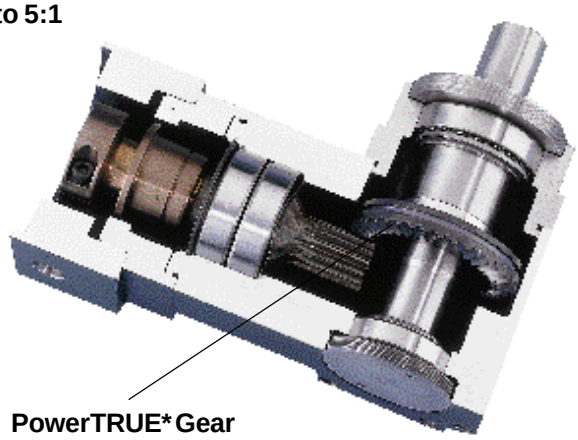

PowerTRUE* Gear

Right angle gear meshes are typically limited to ratios from 1:1 to 3:1 when using standard bevel gears. Compared to these designs, the PowerTRUE 90 gear increases the ratio range to 5:1.

The key to higher torque density is a unique tooth design, created by complex machining made practical with advanced CNC equipment and software. In the design, multiple teeth in the face gear simultaneously mesh with a standard involute pinion. The continuous tooth engagement yields a high contact ratio between the gear and the pinion, boosting torques to new levels and efficiency to 98%.

CNC Machining of a PowerTRUE right angle gear*

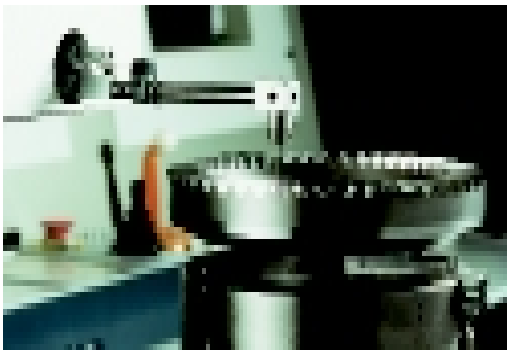

Computerized mapping of gear tooth profile

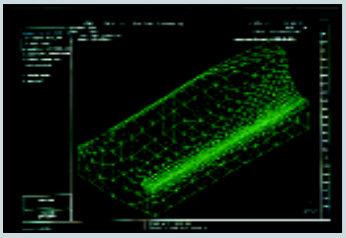

Advanced software enables stress analysis of PowerTRUE tooth profile

Product Feature	Gearhead								
	NemaTRUE*	NemaTRUE 90*	DuraTRUE*	DuraTRUE 90*	AccuTRUE*	AccuTRUE 90*	PowerTRUE 90*	UltraTRUE*	UltraTRUE 90*
PowerTRUE gearing		✓		✓			✓		✓

THOMSON MICRON
Leading in Motion Control Technology
☎1-888-55-4-MOTION•FAX 516-467-9814•www.thomsonindustries.com

The specifications and data in this publication are believed to be accurate and reliable. However, it is the responsibility of the product user to determine the suitability of Thomson Micron products for a specific application. While defective products will be replaced without charge if promptly returned, no liability is assumed beyond such replacement. © 1998 Thomson Micron, LLC
* Trademark of Thomson Industries, Inc. THOMSON is registered in the U.S. Patent Office and in other countries.

Spiral Bevel Right Angle Gearheads offer. . .

- **30% higher torque than straight bevel gears**
- **8X the input speed over straight bevel gears**
- **2X the surface contact of straight bevel gears**
- **Smoother power transmission**
- **Higher Input Speeds**
- **Higher Efficiency**
- **Low noise**

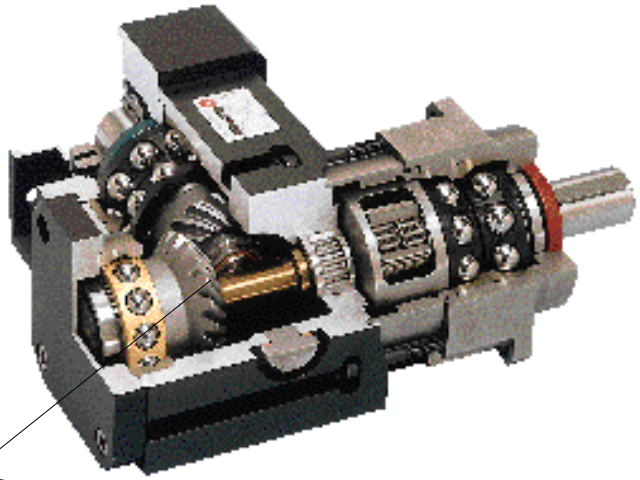

Spiral Bevel Gears

The Thomson Micron AccuTRUE 90* planetary gearhead was designed with spiral bevel gear sets to meet today's most demanding precision servo drive applications. The spiral bevel gear mesh design provides twice the surface contact when compared to ordinary straight bevel gear sets allowing greater torque transmission in a smaller package. The gradual and precise engagement of the spiral bevel gear set minimizes vibrations which results in smooth power transmission, minimal velocity / torque variation and maximum position accuracy.

Spiral Bevel gears can also be back driven which allow the servo to regulate the torque and create a stable system for today's demanding precision applications.

Right Angle Power Transmission Comparison

	*PowerTRUE**	Spiral Bevel	Straight Bevel	Worm Gears
Torque Capacity	High	High	Med	Med
Package Size	Small	Med	Med	Large
Efficiency	>98%	>97%	>95%	35-80%
Maintenance Requirement	Low	Low	Med	High
Servo Motor Compatible	Yes	Yes	Yes	No
Noise Level	Low	Low	Med	Low
Ratio Availability	1:1 to 5:1	1:1 to 3:1	1:1 to 3:1	> 5:1

	Gearhead								
Product Feature	**NemaTRUE***	**NemaTRUE 90***	**DuraTRUE***	**DuraTRUE 90***	**AccuTRUE***	**AccuTRUE 90***	**PowerTRUE 90***	**UltraTRUE***	**UltraTRUE 90***
Spiral Bevel gearing						●			

The specifications and data in this publication are believed to be accurate and reliable. However, it is the responsibility of the product user to determine the suitability of Thomson Micron products for a specific application. While defective products will be replaced without charge if promptly returned, no liability is assumed beyond such replacement. © 1998 Thomson Micron, LLC
* Trademark of Thomson Industries, Inc. THOMSON is registered in the U.S. Patent Office and in other countries.

THOMSON MICRON*
Leading in Motion Control Technology
☎1-888-55-4-MOTION•FAX 516-467-9814•www.thomsonindustries.com

QuickMount* Motor Mounting System

Mounting Instructions

1- Position pinion and shaft collar on motor shaft according to setting distance on the Thomson Micron supplied specification sheet. The shaft collar should be banked against the shoulder on the pinion.

2- Using a torque wrench (see page 80 for ordering), tighten each screw on the shaft collar in an alternating sequence.

3- Apply a light coat of the supplied lubricant to the sealing surface of the pinion and the inner diameter of the seal in the gearhead.

4- Using the supplied hardware, mount the gearhead to the motor. Engagement of motor pinion may require slight rotation of the output shaft.

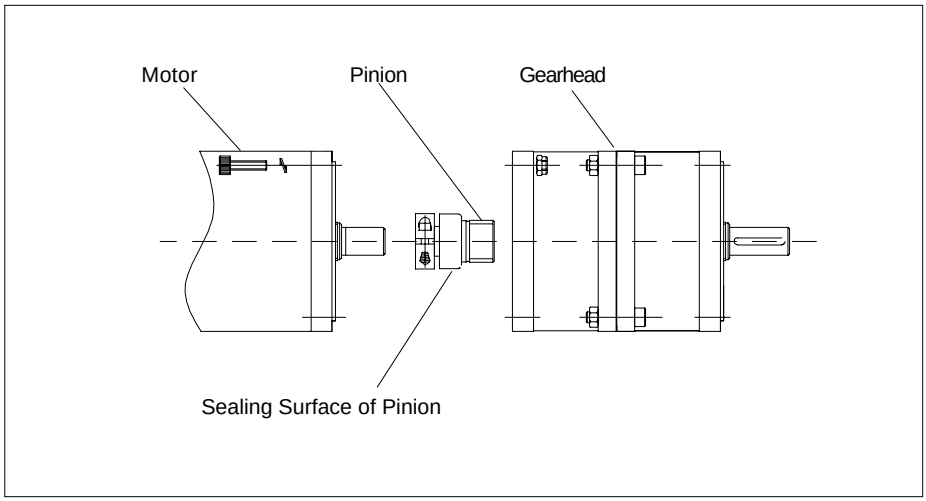

Shaft Collar Tightening Torques

Shaft Diameter over in (mm)	Shaft Diameter including in (mm)	Tightening Torque** in-lb	Tightening Torque** (Nm)	Hex key Size
-	.1969 (5)	14 - 15	(1.6 - 1.7)	3/32
.1969 (5)	.3543 (9)	27 - 28	(3.1 - 3.2)	7/64
.3543 (9)	.4331 (11)	47 - 49	(5.3 - 5.5)	9/64
.4331 (11)	.5906 (15)	72 - 76	(8.1 - 8.6)	5/32
.5906 (15)	.9449 (24)	162 - 170	(18 - 19)	3/16

** For selection and ordering of Thomson Micron torque wrenches see page 80.

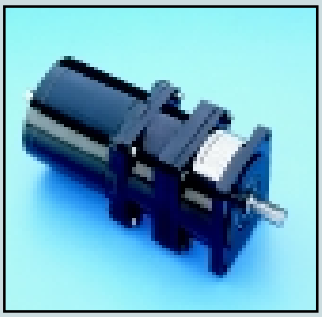

	Gearhead								
Product Feature	NemaTRUE*	NemaTRUE 90*	DuraTRUE*	DuraTRUE 90*	AccuTRUE*	AccuTRUE 90*	PowerTRUE 90*	UltraTRUE*	UltraTRUE 90*
QuickMount system	✓								

THOMSON MICRON
Leading in Motion Control Technology
☎1-888-55-4-MOTION•FAX 516-467-9814•www.thomsonindustries.com

The specifications and data in this publication are believed to be accurate and reliable. However, it is the responsibility of the product user to determine the suitability of Thomson Micron products for a specific application. While defective products will be replaced without charge if promptly returned, no liability is assumed beyond such replacement. © 1998 Thomson Micron, LLC
* Trademark of Thomson Industries, Inc. THOMSON is registered in the U.S. Patent Office and in other countries.

AccuMount* Motor Mounting System

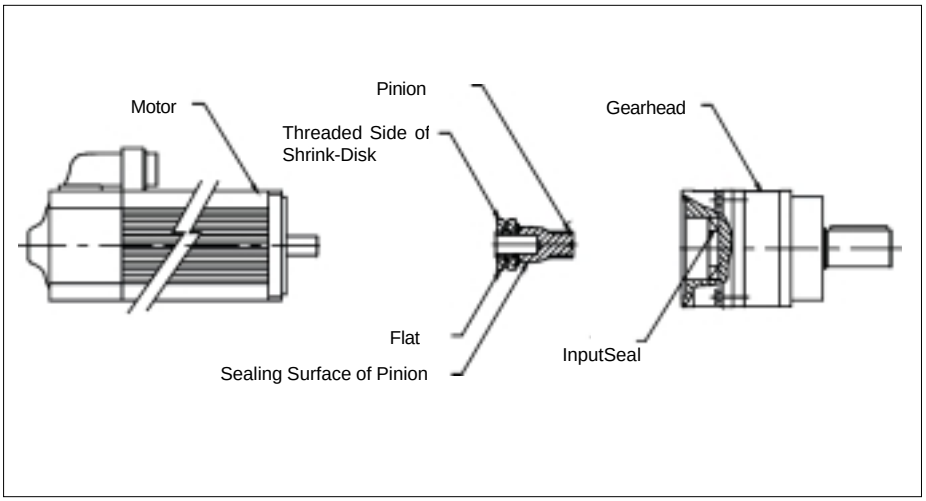

Shrink-Disk Tightening Torques

Shaft Diameter over in (mm)	Shaft Diameter including in (mm)	Tightening Torque** in-lb	Tightening Torque** (Nm)	Screw Size	Width Across Flats (mm)	Shrink Disk Size
.2362 (6)	.3150 (8)	12-13.5	(1.4-1.5)	M4	7	10
.3150 (8)	.4331 (11)	25-28.1	(2.8-3.2)	M5	8	13
.4331 (11)	.5512 (14)	25-28.1	(2.8-3.2)	M5	8	16
.5512 (14)	.7874 (20)	30-33.8	(3.4-3.8)	M5	8	24
.7874 (20)	1.0236 (26)	30-33.8	(3.4-3.8)	M5	8	30
1.0236 (26)	1.2598 (32)	75-84.4	(8.5-9.5)	M6	10	36
1.2598 (32)	1.5000 (38.1)	75-84.4	(8.5-9.5)	M6	10	44
1.5000 (38.1)	1.6535 (42)	75-84.4	(8.5-9.5)	M6	10	50
1.6535 (42)	1.8898 (48)	75-84.4	(8.5-9.5)	M6	10	55
1.8898 (48)	2.3622 (60)	75-84.4	(8.5-9.5)	M6	10	68

** For selection and ordering of Thomson Micron torque wrenches see page 80.

Mounting Instructions

1- Position pinion and shrink-disk on motor shaft according to setting distance on the Thomson Micron supplied specification sheet. The shrink-disk should be mounted flush with the back of the pinion hub and bolt heads facing towards the pinion.

2- Tighten all bolts on the shrink-disk to the specified value with a torque wrench (page 80) while holding the flats on the threaded hub of the shrink-disk. Make sure the clamping tool is clear from the adjacent hub since the hubs will be drawn together as the bolts are tightened.

3- Apply a light coat of the supplied lubricant to the sealing surface of the pinion and the inner diameter of the input seal in the gearhead.

4- Using the supplied hardware, mount the gearhead to the motor. Engagement of motor pinion may require slight rotation of the output shaft.

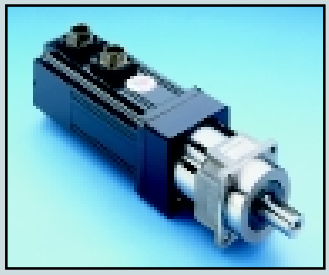

Product Feature	Gearhead: NemaTRUE*	NemaTRUE 90*	DuraTRUE*	DuraTRUE 90*	AccuTRUE*	AccuTRUE 90*	PowerTRUE 90*	UltraTRUE*	UltraTRUE 90*
AccuMount system					●	●			

The specifications and data in this publication are believed to be accurate and reliable. However, it is the responsibility of the product user to determine the suitability of Thomson Micron products for a specific application. While defective products will be replaced without charge if promptly returned, no liability is assumed beyond such replacement. © 1998 Thomson Micron, LLC
* Trademark of Thomson Industries, Inc. THOMSON is registered in the U.S. Patent Office and in other countries.

THOMSON MICRON*
Leading in Motion Control Technology
☎1-888-55-4-MOTION•FAX 516-467-9814•www.thomsonindustries.com

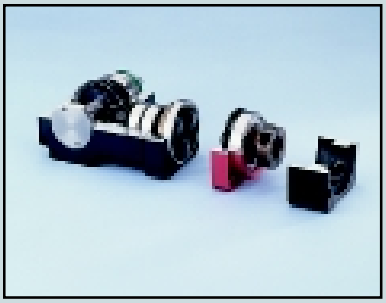

Exploded view of RediMount mounting system

Mounting Instructions

1- Slide the provided sleeve into the hub and align the slot in the bushing with the slot in the hub.

2- Set the motor on a work surface or holding fixture with the output shaft facing straight up. If there is a key on the motor, remove it and align the keyway with the slot in the hub. Slide the gearhead down onto the motor shaft.

3- Rotate the hub to align the input housing access holes with the hub clamping bolts.

4 - Using a torque wrench (page 80), tighten the hub bolts to the pre-torque value indicated in the table.

5 - Bolt the motor to the gearhead with the bolts provided.

6 - Gradually tighten the hub bolts in three steps, increasing the torque each time until reaching the final tightening torque in the table.

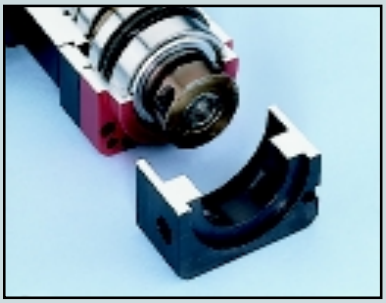

Close-up view of the bearing system and hub sleeve which accomodates various motor shaft diameters.

RediMount Motor Mounting System*

- **Self-aligning hub** - Maintains concentricity between motor shaft and gearhead
- **Pre-installed pinion** - Eliminates pinion setting procedure
- **Modular design** - Allows gearhead and input housing to be stocked separately
- **Flexibility** - Allows easy changeover to alternate motors
- **Interchangeability** - Same RediMount system is used throughout 6 product lines

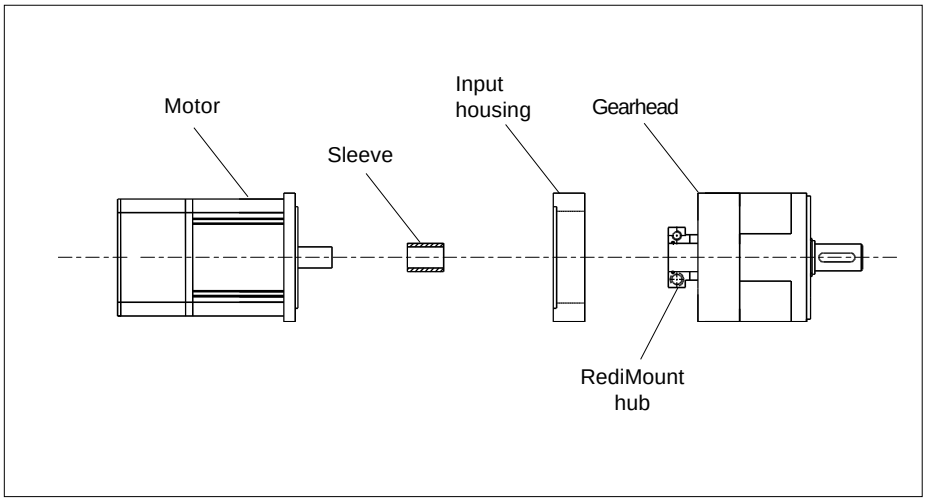

Hub Bolt Tightening Torques

Gearhead Model	Gearhead Frame Size	Pre-Tightening Torque in-lb	Pre-Tightening Torque Nm	Final Tightening Torque in-lb	Final Tightening Torque Nm
NemaTRUE 90*	23	2	.2	39	4.4
	34	4	.4	76	8.5
	42	16	1.8	316	36.0
DuraTRUE* DuraTRUE 90*	60	2	.2	39	4.4
	90	4	.4	76	8.5
	115	16	1.8	316	36.0
	142	3 2	3.6	636	72.0
UltraTRUE* UltraTRUE 90* PowerTRUE 90*	60	2	.2	39	4.4
	75	4	.4	76	8.5
	100	16	1.8	316	36.0
	140	32	3.6	636	72.0
	180	55	6.3	1104	125.0

Product Feature	Gearhead: NemaTRUE*	NemaTRUE 90*	DuraTRUE*	DuraTRUE 90*	AccuTRUE*	AccuTRUE 90*	PowerTRUE 90*	UltraTRUE*	UltraTRUE 90*
RediMount system		✓	✓	✓			✓	✓	✓

THOMSON MICRON
Leading in Motion Control Technology
☎1-888-55-4-MOTION•FAX 516-467-9814•www.thomsonindustries.com

The specifications and data in this publication are believed to be accurate and reliable. However, it is the responsibility of the product user to determine the suitability of Thomson Micron products for a specific application. While defective products will be replaced without charge if promptly returned, no liability is assumed beyond such replacement. © 1998 Thomson Micron, LLC
* Trademark of Thomson Industries, Inc. THOMSON is registered in the U.S. Patent Office and in other countries.

GEARHEAD SELECTION

Step 1: Select the required precision class and gearhead configuration (in-line or right angle).

Step 2: Select the proper gearhead using exact or general method.

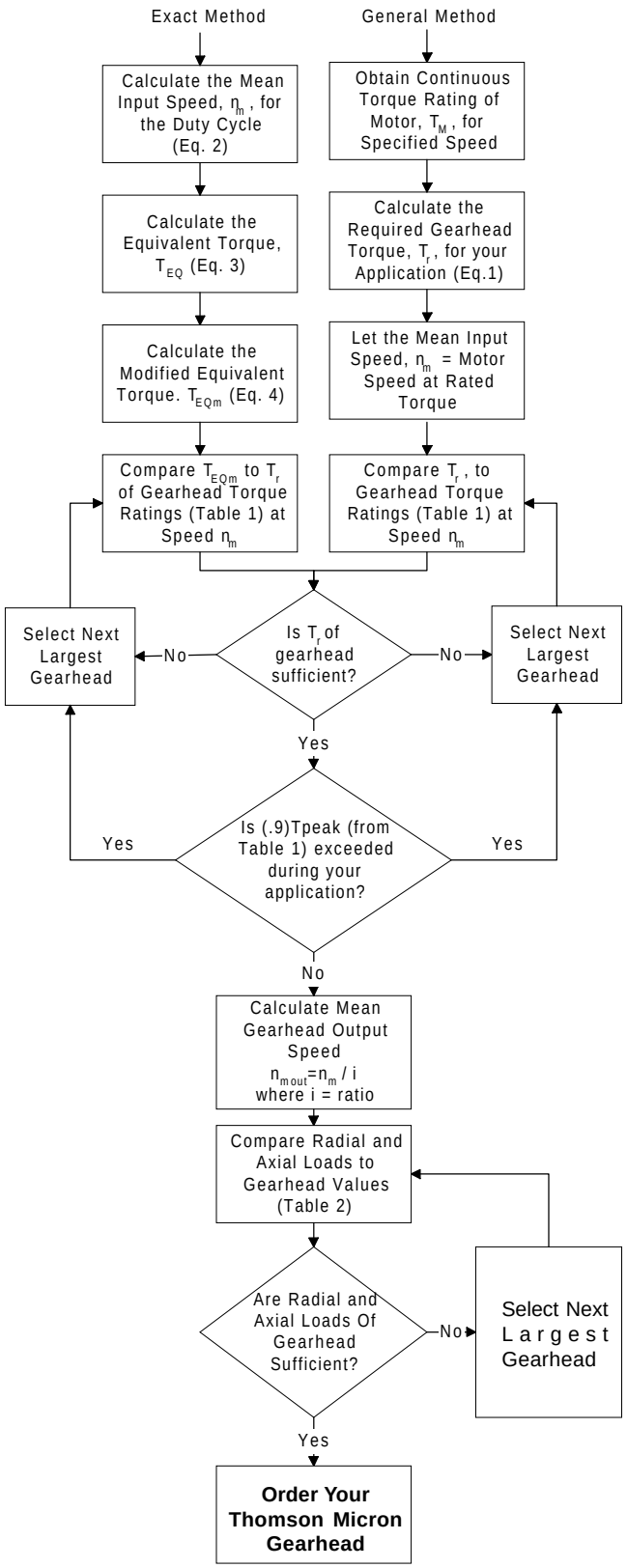

General Method:

Required Gearhead Torque (T_r)

(1) $T_r = T_M{}^* \times i \times e$

where: $T_M{}^*$= continuous torque of motor
i = gearhead ratio
e = efficiency of gearhead

* Since many motors are capable of exceeding their continuous torque rating for extended lengths of time, the value for T_M will only provide a starting point for gearhead selection. Only use the general method if the continuous motor rating is not exceeded in the application.

Exact Method:

Motion Profile

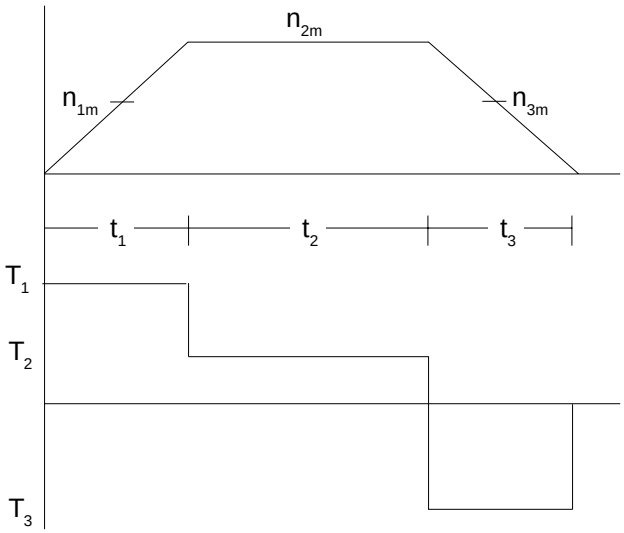

t_n = time period n
n_{nm} = mean speed during time period t_n
T_n = torque during time period t_n

Mean input speed (n_m)

(2) $$n_m = \frac{n_{1m}t_1 + n_{2m}t_2 + n_{3m}t_3 + \ldots\ldots + n_{nm}t_n}{t_t}$$

where $t_t = t_1 + t_2 + t_3 + \ldots\ldots\ldots + t_n$

Equivalent torque (T_{EQ})

(3) $$T_{EQ} = \sqrt[8.7]{T_1^{8.7}\frac{n_{1m}t_1}{n_m t_t} + T_2^{8.7}\frac{n_{2m}t_2}{n_m t_t} + T_3^{8.7}\frac{n_{3m}t_3}{n_m t_t} + \ldots + T_n^{8.7}\frac{n_{nm}t_n}{n_m t_t}}$$

Modified equivalent torque (T_{EQm})

(4) $$T_{EQm} = \frac{T_{EQ}}{Q}$$

where Q is :

Q	# of Cycles/hr
1	> 0
.9	> 1000
.7	> 2500
.5	> 5000

The specifications and data in this publication are believed to be accurate and reliable. However, it is the responsibility of the product user to determine the suitability of Thomson Micron products for a specific application. While defective products will be replaced without charge if promptly returned, no liability is assumed beyond such replacement. © 1998 Thomson Micron, LLC
* Trademark of Thomson Industries, Inc. THOMSON is registered in the U.S. Patent Office and in other countries.

THOMSON MICRON*
Leading in Motion Control Technology
☎1-888-55-4-MOTION•FAX 516-467-9814•www.thomsonindustries.com

Notes:

THOMSON MICRON*
Leading in Motion Control Technology
☎1-888-55-4-MOTION•FAX 516-467-9814•www.thomsonindustries.com

The specifications and data in this publication are believed to be accurate and reliable. However, it is the responsibility of the product user to determine the suitability of Thomson Micron products for a specific application. While defective products will be replaced without charge if promptly returned, no liability is assumed beyond such replacement. © 1998 Thomson Micron, LLC
* Trademark of Thomson Industries, Inc. THOMSON is registered in the U.S. Patent Office and in other countries.

NemaTRUE *
True Planetary Gearheads*

Ready for Immediate Delivery

Precision: 13 arc-minutes
Frame Sizes: 23, 34, and 42
Torque Capacity: up to 1600 in-lb
Ratio Availability: 3:1 thru 100:1
Radial load capacity: up to 840 lb
Mounting System: QuickMount*

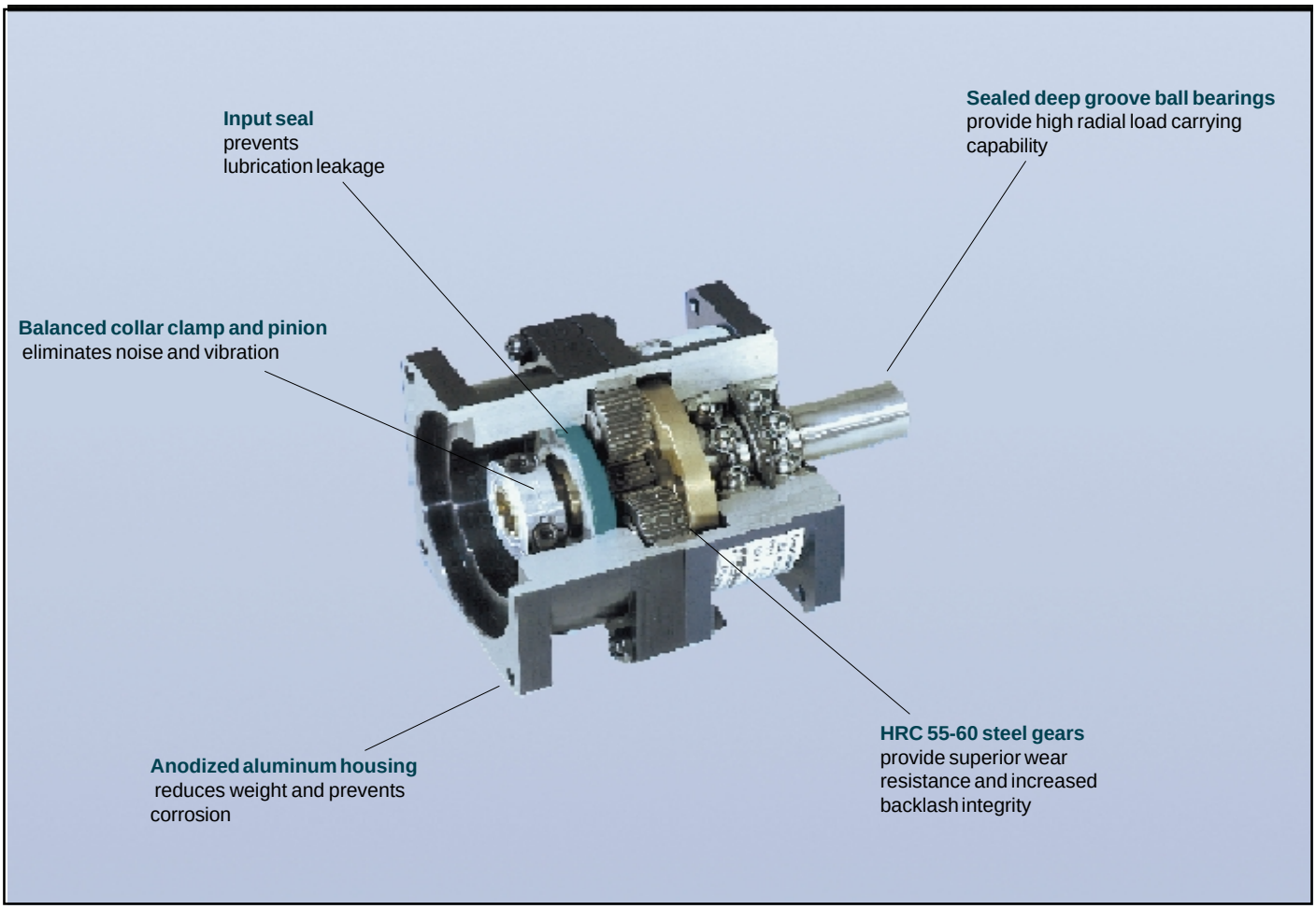

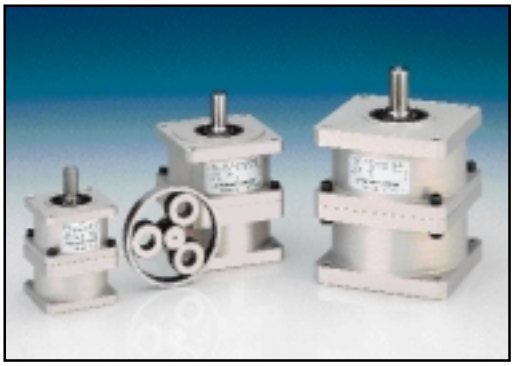

Index Page

Sizing NT2
NemaTRUE 23 Planetary Gearhead.....NT3
NemaTRUE 34 Planetary Gearhead.....NT4
NemaTRUE 42 Planetary Gearhead.....NT5
Selection.....11
Mounting Tools.....80
Ordering.....Inside Back Cover
Free motor mounting book.....Call 1-888-55-4-Motion

The specifications and data in this publication are believed to be accurate and reliable. However, it is the responsibility of the product user to determine the suitability of Thomson Micron products for a specific application. While defective products will be replaced without charge if promptly returned, no liability is assumed beyond such replacement. © 1998 Thomson Micron, LLC
* Trademark of Thomson Industries, Inc. THOMSON is registered in the U.S. Patent Office and in other

THOMSON MICRON*
Leading in Motion Control Technology
☎1-888-55-4-MOTION•FAX 516-467-9814•www.thomsonindustries.com

SIZING

NemaTRUE* planetary gearheads are designed to mount to any standard 23, 34, or 42 frame size motor with Thomson Micron's unique **QuickMount*** system. This system supplies the user with the proper input pinion, gearhead and mounting hardware needed to mount to any standard frame size stepper motor.

For servo motors, Thomson Micron's **QuickMount *PLUS**** system was developed to ease the burden of interfacing motor and gearhead components without the addition of an adapter plate. By supplying us with the applicable motor mounting dimensions, Thomson Micron will quickly manufacture a gearhead and pinion suitable for your motor.

Our extensive database of motor and gearhead combinations, together with our staff of skilled application engineers makes sizing and selection quick and easy.

Both the **QuickMount a**nd **QuickMount *PLUS*** systems conform to your motor's mounting flange without placing a secondary adapter plate between motor and gearhead. This important feature preserves concentricity and eliminates the tolerance stack-up associated with adapter plates.

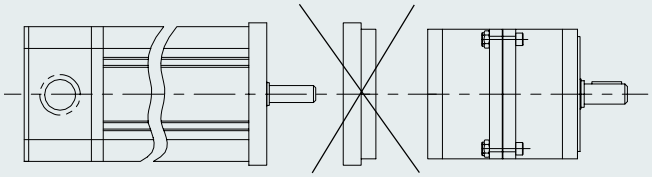

*Old style conventional gearheads use an adapter plate to interface motor and gearhead. Thomson Micron's unique **QuickMount** system eliminates the adapter plate, reducing the number of parts, reducing cost, and preserving concentricity.*

QuickMount System Motor Requirements

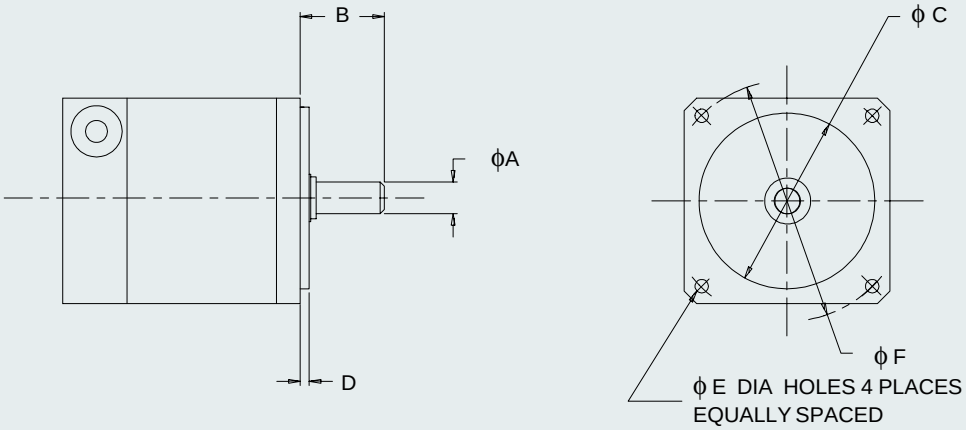

The **QuickMount** system should be used with Thomson Micron's **NemaTRUE** line of gearheads if the motor falls within the following dimensions, otherwise our **QuickMount *PLUS*** system will be provided:

		Motor Dimensional Requirements		
Item	**Description**	**23 Frame**	**34 Frame**	**42 Frame**
A	**Shaft diameter** ***(mm)***	.2495 / .2500 *(6.34 / 6.35)*	.3745 / .3750 *(9.51 / 9.53)*	.6245/.6250 *(15.86/15.88)*
B	**Shaft length** ***(mm)***	.71 / .90 *(18 / 22.9)*	1.03 / 1.23 *(26.2 / 31.2)*	1.20/1.42 *(30.5/36.1)*
C	**Pilot diameter** ***(mm)***	1.498 / 1.502 *(38.05 / 38.15)*	2.873 / 2.877 *(72.97 / 73.08)*	2.184/2.188 *(55.47/55.58)*
D	**Pilot length** ***(mm)***	.04 / .12 *(1.0 / 3.0)*	.04 / .20 *(1.0 / 5.1)*	.05/.20 *(1.3/5.1)*
E	**Bolt hole** ***(mm)***	.190 / .205 *(4.8 / 5.2)*	.21 / .23 *(5.3 / 5.8)*	.27/.29 *(6.9/7.4)*
F	**Bolt circle** ***(mm)***	2.615 / 2.635 *(66.42 / 66.93)*	3.860 / 3.890 *(98.04 / 98.81)*	4.935/4.964 *(125.35/126.09)*

THOMSON MICRON
Leading in Motion Control Technology
☎1-888-55-4-MOTION•FAX 516-467-9814•www.thomsonindustries.com

The specifications and data in this publication are believed to be accurate and reliable. However, it is the responsibility of the product user to determine the suitability of Thomson Micron products for a specific application. While defective products will be replaced without charge if promptly returned, no liability is assumed beyond such replacement. © 1998 Thomson Micron, LLC
* Trademark of Thomson Industries, Inc. THOMSON is registered in the U.S. Patent Office and in other

NemaTRUE * Size 23 English

True Planetary Gearhead*

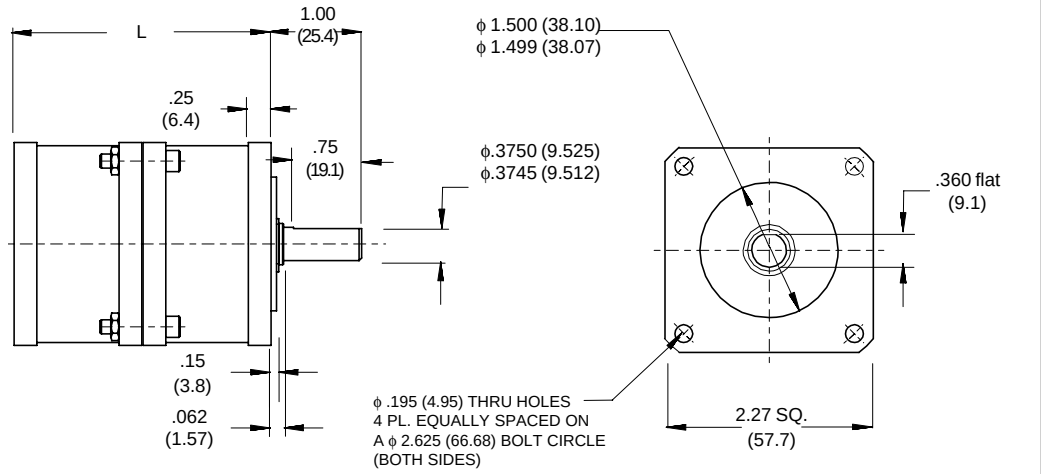

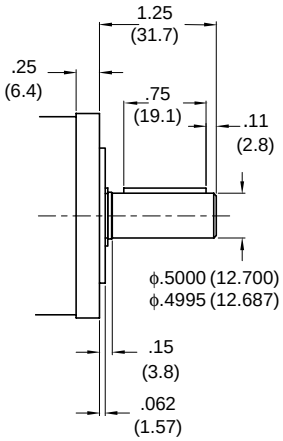

NemaTRUE *PLUS (NTP)**
Heavy Duty Output Shaft

Ratio	Dimension 'L' in *(mm)*	Backlash (arc-min) Precision	Backlash (arc-min) High Precision	Weight lb *(kg)*	Efficiency
3:1 to 10:1	2.82 (71.6)	13 max	8 max	1.5 *(0.7)*	90%
15:1 to 100:1	3.50 (88.9)	15 max	9 max	1.9 *(0.9)*	85%

All Dimensions are: in (mm)
Call 1-888-55-4-MOTION to receive a free motor mounting catalog

Figure NT23

(TABLE 1) PERFORMANCE SPECIFICATIONS

Part Number	Ratio[1]	10,000 HOUR LIFE T_r (1000 rpm) in-lb *(Nm)*	T_r (2000 rpm) in-lb *(Nm)*	T_r (3000 rpm) in-lb *(Nm)*	T_r (4000 rpm) in-lb *(Nm)*	T_{peak} in-lb *(Nm)*	J in-lb-sec^{2}x10^{-4} (kg-cm^2)	Torsional Stiffness in-lb/arc-min *(Nm/arc-min)* NT	Torsional Stiffness NTP
NT23-003	3:1	98 (11.1)	80 (9.0)	70 (7.9)	65 (7.3)	150 (16.9)	.67 (.076)	6.3 (.71)	15.8 (1.8)
NT23-005	5:1	105 (11.9)	88 (9.9)	78 (8.8)	71 (8.0)	250 (28.2)	.22 (.025)	6.3 (.71)	15.8 (1.8)
NT23-010	10:1	63 (7.1)	58 (6.6)	54 (6.1)	52 (5.9)	250 (28.2)	.14 (.016)	6.3 (.71)	15.8 (1.8)
NT23-015	15:1	124 (14.0)	110 (12.4)	105 (11.9)	100 (11.3)	275 (31.1)	.21 (.024)	6.3 (.71)	15.8 (1.8)
NT23-025	25:1	175 (19.8)	142 (16.0)	125 (14.1)	115 (13.0)	275 (31.1)	.21 (.024)	6.3 (.71)	15.8 (1.8)
NT23-030	30:1	135 (15.3)	124 (14.0)	115 (13.0)	110 (12.4)	275 (31.1)	.13 (.015)	6.3 (.71)	15.8 (1.8)
NT23-050	50:1	202 (22.8)	175 (19.8)	152 (17.2)	142 (16.0)	275 (31.1)	.13 (.015)	6.3 (.71)	15.8 (1.8)
NT23-100	100:1	85 (9.6)	79 (8.9)	74 (8.4)	70 (7.9)	275 (31.1)	.13 (.015)	6.3 (.71)	15.8 (1.8)

[1] Ratios are exact, higher ratios are also available, consult factory.
T_r = Rated output torque at rated speed for specified hours of life.
J = Mass moment of inertia reflected to the input shaft (including pinion assembly).
See page 11 for gearhead selection criteria

For ordering information see inside back cover

(TABLE 2) RADIAL AND AXIAL LOAD RATINGS

These graphs display the allowable radial load at a given distance (X) from the mounting surface based on an L_{10} life of 10,000 hours for the mean output speed, n_{mout}, as described on page 11.

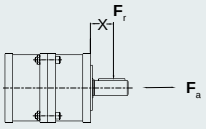

NT23 with STANDARD BEARINGS
Allowable axial load, F_a = 145 lb_f (645N) at 250 rpm

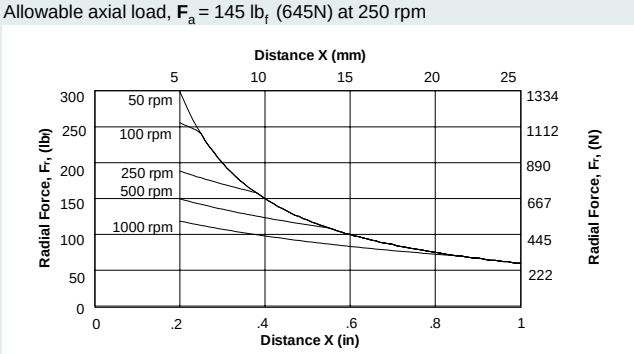

NTP23 with HEAVY DUTY BEARINGS
Allowable axial load, F_a = 310 lb_f (1379N) at 250 rpm

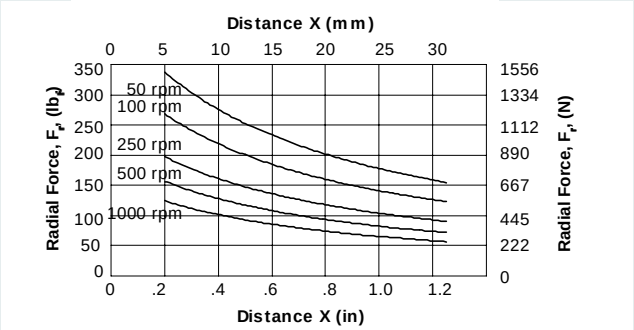

The specifications and data in this publication are believed to be accurate and reliable. However, it is the responsibility of the product user to determine the suitability of Thomson Micron products for a specific application. While defective products will be replaced without charge if promptly returned, no liability is assumed beyond such replacement. © 1998 Thomson Micron, LLC
* Trademark of Thomson Industries, Inc. THOMSON is registered in the U.S. Patent Office and in other

THOMSON MICRON*
Leading in Motion Control Technology
☎1-888-55-4-MOTION•FAX 516-467-9814•www.thomsonindustries.com

NemaTRUE* Size 34 English

TRUE PLANETARY Gearhead*

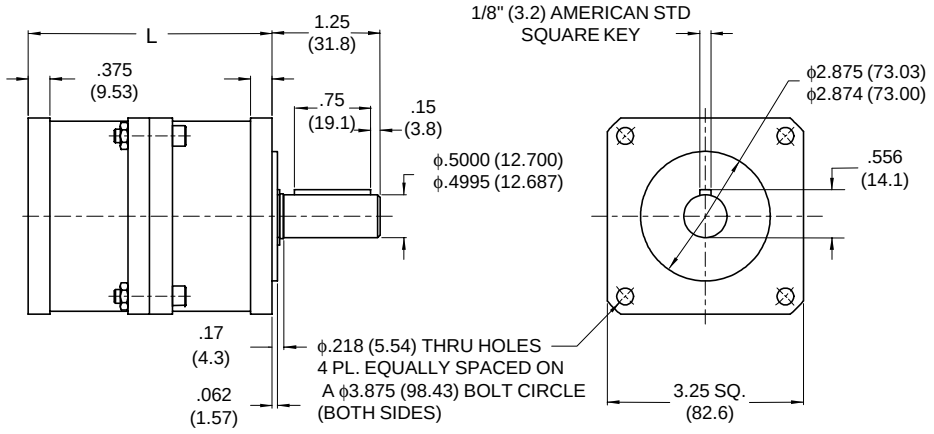

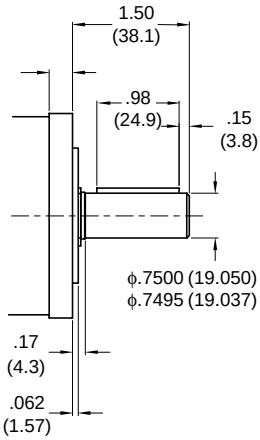

NemaTRUE *PLUS (NTP)**
Heavy Duty Output Shaft

Ratio	Dimension 'L' in *(mm)*	Backlash (arc-min) Precision	Backlash (arc-min) High Precision	Weight lb *(kg)*	Efficiency
3:1 to 10:1	3.74 (95.0)	13 max	8 max	4.2 *(1.9)*	90%
15:1 to 100:1	4.65 (118.1)	15 max	9 max	5.6 *(2.5)*	85%

All Dimensions are: in (mm)
Call 1-888-55-4-MOTION to receive a free motor mounting catalog

Figure NT34

(TABLE 1) PERFORMANCE SPECIFICATIONS

Part Number	Ratio[1]	10,000 HOUR LIFE T_r (1000 rpm) in-lb *(Nm)*	T_r (2000 rpm) in-lb *(Nm)*	T_r (3000 rpm) in-lb *(Nm)*	T_r (4000 rpm) in-lb *(Nm)*	T_{peak} in-lb *(Nm)*	J in-lb-sec²x10⁻⁴ (kg-cm²)	Torsional Stiffness in-lb/arc-min *(Nm/arc-min)* *NT*	Torsional Stiffness *NTP*
NT34-003	3:1	360 (40.7)	320 (36.2)	295 (33.3)	270 (30.5)	510 (57.6)	3.9 (.44)	16.8 (1.9)	48 (5.4)
NT34-005	5:1	490 (55.4)	400 (45.2)	355 (40.1)	325 (36.7)	700 (79.1)	1.2 (.14)	16.8 (1.9)	48 (5.4)
NT34-010	10:1	238 (26.9)	212 (24.0)	200 (22.6)	192 (21.7)	700 (79.1)	.66 (.075)	16.8 (1.9)	48 (5.4)
NT34-015	15:1	454 (51.3)	416 (47.0)	391 (44.2)	373 (42.1)	850 (96.0)	1.2 (.14)	16.8 (1.9)	48 (5.4)
NT34-025	25:1	652 (73.7)	595 (67.2)	562 (63.5)	526 (59.4)	850 (96.0)	1.2 (.14)	16.8 (1.9)	48 (5.4)
NT34-030	30:1	500 (56.5)	454 (51.3)	432 (48.8)	416 (47.0)	850 (96.0)	.66 (.075)	16.8 (1.9)	48 (5.4)
NT34-050	50:1	720 (81.4)	652 (73.7)	618 (69.8)	595 (67.2)	850 (96.0)	.65 (.074)	16.8 (1.9)	48 (5.4)
NT34-100	100:1	325 (36.7)	295 (33.3)	280 (31.6)	270 (30.5)	700 (79.1)	.65 (.074)	16.8 (1.9)	48 (5.4)

[1] Ratios are exact, higher ratios are also available, consult factory.
T_r = Rated output torque at rated speed for specified hours of life.
J = Mass moment of inertia reflected to the input shaft (including pinion assembly).
See page 11 for gearhead selection criteria

For ordering information see inside back cover

(TABLE 2) RADIAL AND AXIAL LOAD RATINGS FOR STANDARD AND HEAVY DUTY BEARINGS

These graphs display the allowable radial load at a given distance (X) from the mounting surface based on an L_{10} life of 10,000 hours for the mean output speed, n_{mout}, as described on page 11.

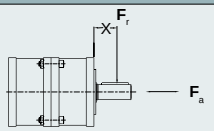

NT34 with STANDARD BEARINGS
Allowable axial load, F_a = 200 lb_f (890N) at 250 rpm

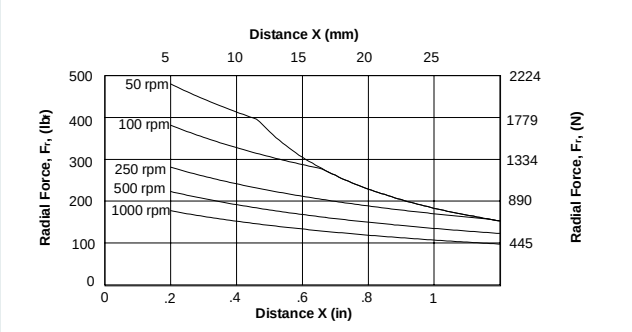

NTP34 with HEAVY DUTY BEARINGS
Allowable axial load, F_a = 510 lb_f (2269N) at 250 rpm

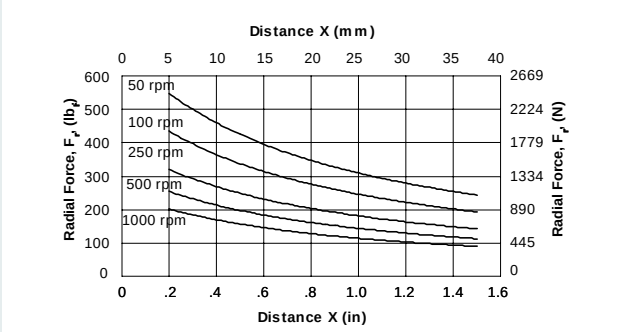

THOMSON MICRON*
Leading in Motion Control Technology
☎1-888-55-4-MOTION•FAX 516-467-9814•www.thomsonindustries.com

The specifications and data in this publication are believed to be accurate and reliable. However, it is the responsibility of the product user to determine the suitability of Thomson Micron products for a specific application. While defective products will be replaced without charge if promptly returned, no liability is assumed beyond such replacement. © 1998 Thomson Micron, LLC
* Trademark of Thomson Industries, Inc. THOMSON is registered in the U.S. Patent Office and in other

NemaTRUE* Size 42 English

TRUE PLANETARY Gearhead*

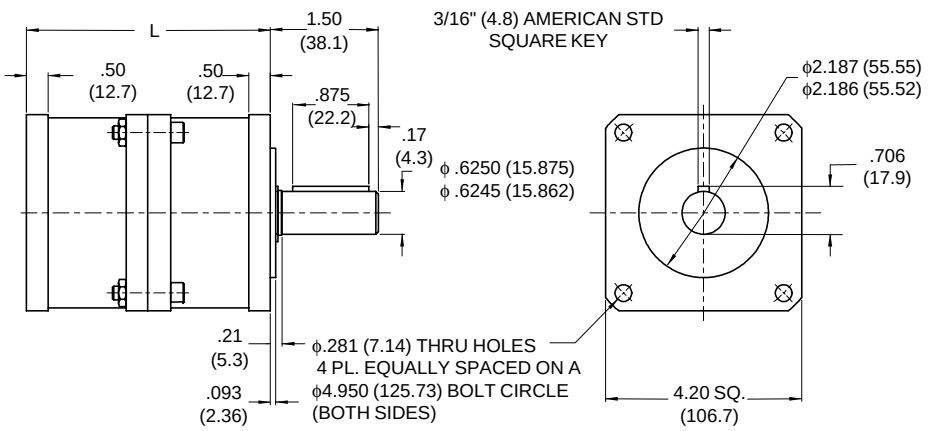

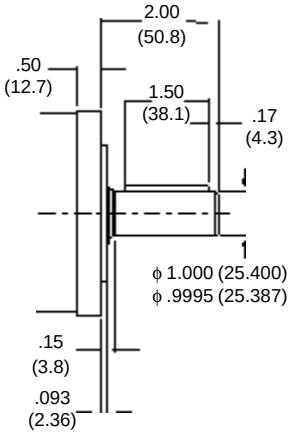

NemaTRUE *PLUS (NTP)**
Heavy Duty Output Shaft

Ratio	Dimension 'L' in *(mm)*	Backlash (arc-min) Precision	Backlash (arc-min) High Precision	Weight lb *(kg)*	Efficiency
3:1 to 10:1	4.67 (118.6)	13 max	8 max	8.9 (4.0)	90%
15:1 to 100:1	5.90 (149.9)	15 max	9 max	11.7 (5.3)	85%

All Dimensions are: in (mm)
Call 1-888-55-4-MOTION to receive a free motor mounting catalog

Figure NT42

(TABLE 1) PERFORMANCE SPECIFICATIONS

Part Number	Ratio[1]	10,000 HOUR LIFE T_r (1000 rpm) in-lb *(Nm)*	T_r (2000 rpm) in-lb *(Nm)*	T_r (3000 rpm) in-lb *(Nm)*	T_r (4000 rpm) in-lb *(Nm)*	T_{peak} in-lb *(Nm)*	J in-lb-sec²x10 $^{-4}$ (kg-cm²)	Torsional Stiffness in-lb/arc-min *(Nm/arc-min)* NT	Torsional Stiffness NTP
NT42-003	3:1	690 (78.0)	594 (67.1)	530 (59.9)	485 (54.8)	1000 (113.0)	14 (1.6)	31 (3.5)	154 (17.4)
NT42-005	5:1	810 (91.5)	658 (74.4)	582 (65.8)	530 (59.9)	1000 (113.0)	3.8 (.43)	31 (3.5)	154 (17.4)
NT42-010	10:1	460 (52.0)	412 (46.6)	388 (43.8)	370 (41.8)	1000 (113.0)	1.9 (.21)	31 (3.5)	154 (17.4)
NT42-015	15:1	878 (99.2)	805 (91.0)	756 (85.4)	715 (80.8)	1600 (180.8)	3.9 (.44)	31 (3.5)	154 (17.4)
NT42-025	25:1	1250 (141.2)	1050 (118.6)	945 (106.8)	865 (97.7)	1600 (180.8)	3.7 (.42)	31 (3.5)	154 (17.4)
NT42-030	30:1	972 (109.8)	878 (99.2)	842 (95.1)	805 (91.0)	1600 (180.8)	1.9 (.21)	31 (3.5)	154 (17.4)
NT42-050	50:1	1395 (157.6)	1250 (141.2)	1150 (129.9)	1050 (118.6)	1600 (180.8)	1.8 (.20)	31 (3.5)	154 (17.4)
NT42-100	100:1	630 (71.2)	575 (65.0)	540 (61.0)	522 (59.0)	1200 (135.6)	1.8 (.20)	31 (3.5)	154 (17.4)

[1] Ratios are exact, higher ratios are also available, consult factory.
T_r = Rated output torque at rated speed for specified hours of life.
J = Mass moment of inertia reflected to the input shaft (including pinion assembly).
See page 11 for gearhead selection criteria

For ordering information see inside back cover

(TABLE 2) RADIAL AND AXIAL LOAD RATINGS FOR STANDARD AND HEAVY DUTY BEARINGS

These graphs display the allowable radial load at a given distance (X) from the mounting surface based on an L_{10} life of 10,000 hours for the mean output speed, n_{mout}, as described on page 11.

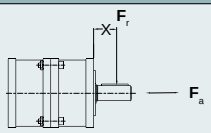

NT42 with STANDARD BEARINGS
Allowable axial load, F_a = 270 lb_f (1201N) at 250 rpm

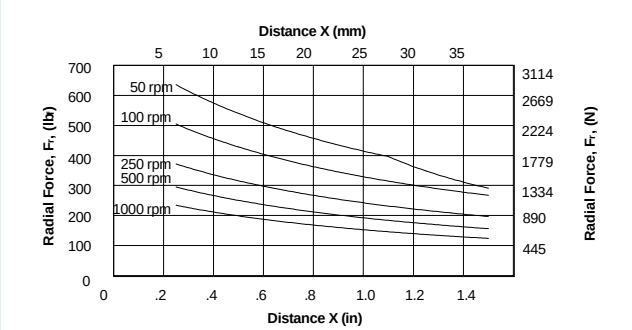

NTP42 with HEAVY DUTY BEARINGS
Allowable axial load, F_a = 760 lb_f (3380N) at 250 rpm

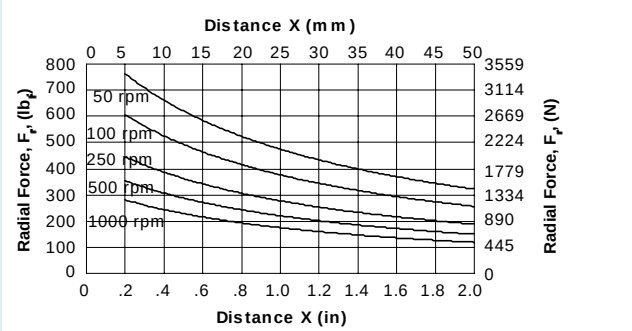

The specifications and data in this publication are believed to be accurate and reliable. However, it is the responsibility of the product user to determine the suitability of Thomson Micron products for a specific application. While defective products will be replaced without charge if promptly returned, no liability is assumed beyond such replacement. © 1998 Thomson Micron, LLC
* Trademark of Thomson Industries, Inc. THOMSON is registered in the U.S. Patent Office and in other

Notes:

THOMSON MICRON*
Leading in Motion Control Technology
☎1-888-55-4-MOTION•FAX 516-467-9814•www.thomsonindustries.com

The specifications and data in this publication are believed to be accurate and reliable. However, it is the responsibility of the product user to determine the suitability of Thomson Micron products for a specific application. While defective products will be replaced without charge if promptly returned, no liability is assumed beyond such replacement. © 1998 Thomson Micron, LLC
* Trademark of Thomson Industries, Inc. THOMSON is registered in the U.S. Patent Office and in other

NemaTRUE 90*
Right Angle Gearheads

Ready for Immediate Delivery

Precision: 13 arc-minutes
Frame Sizes: 23, 34, and 42
Torque Capacity: up to 2255 in-lb

Ratio Availability: 1:1 thru 500:1
Radial load capacity: up to 650 lb
Mounting system: RediMount*

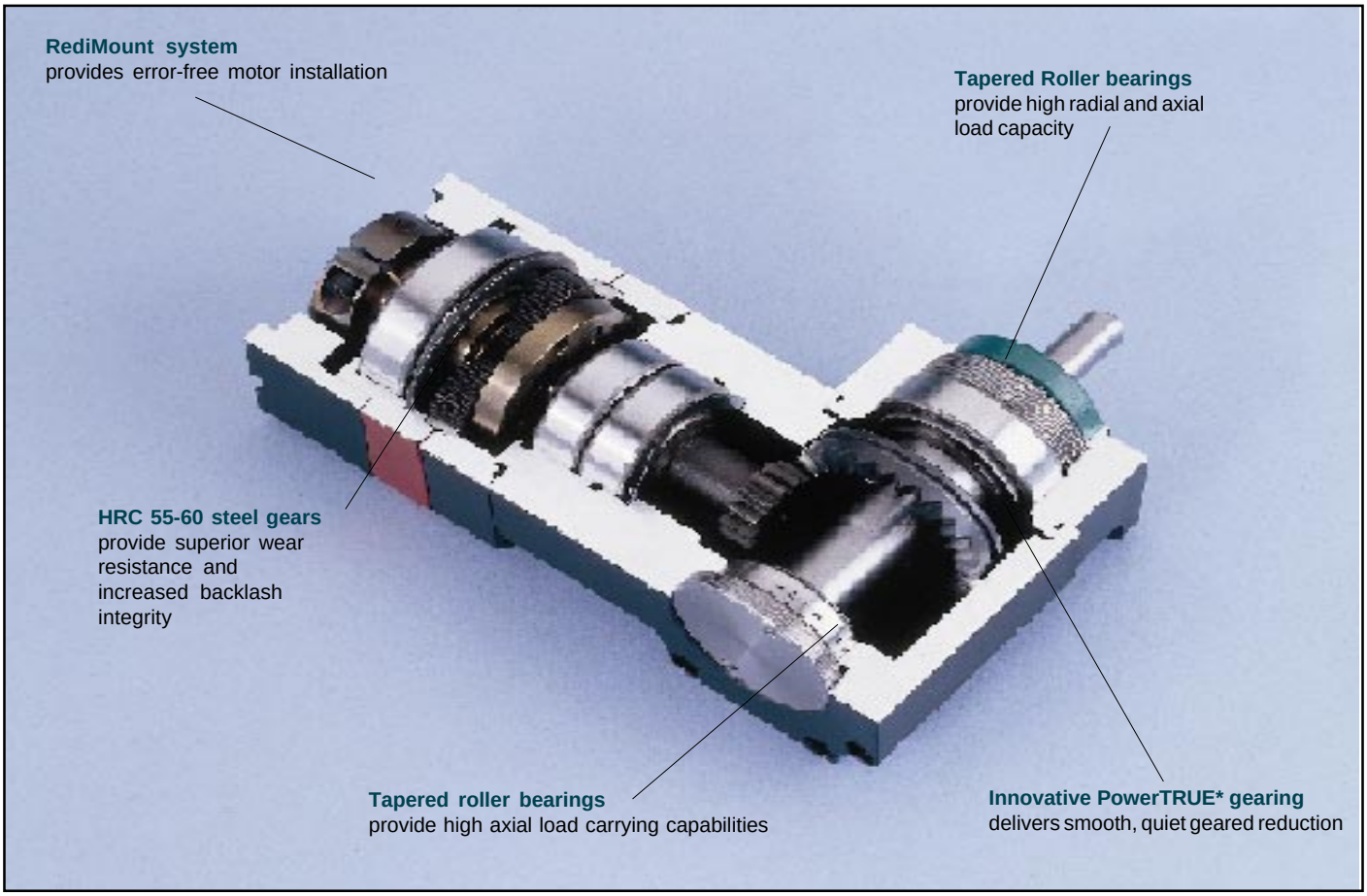

Index Page

NemaTRUE 90 Size 23 Planetary Gearhead.....NTR3
NemaTRUE 90 Size 34 Planetary Gearhead.....NTR4
NemaTRUE 90 Size42 Planetary Gearhead.....NTR5
Selection.....11
Mounting Tools.....80
Ordering.....Inside Back Cover
Free motor mounting book.....Call 1-888-55-4-Motion

The specifications and data in this publication are believed to be accurate and reliable. However, it is the responsibility of the product user to determine the suitability of Thomson Micron products for a specific application. While defective products will be replaced without charge if promptly returned, no liability is assumed beyond such replacement. © 1998 Thomson Micron, LLC
* Trademark of Thomson Industries, Inc. THOMSON is registered in the U.S. Patent and Trademark Office and in other countries.

NemaTRUE 90* Size 23 English

Right Angle Gearhead

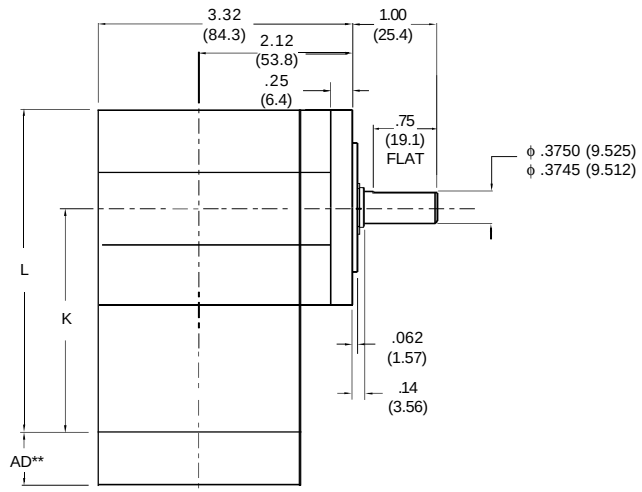

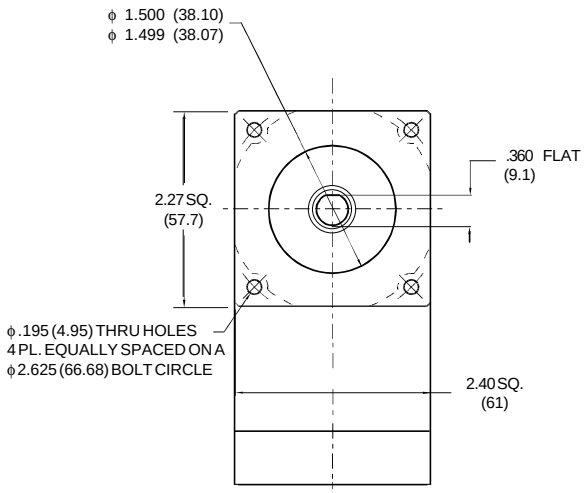

Ratio	Dimension 'K' in *(mm)*	Dimension 'L' in *(mm)*	Backlash (arc-min)	Weight lb *(Kg)*	Efficiency
1:1 to 5:1P	3.11 *(79)*	4.31 *(109.5)*	13 max	3.0 *(1.4)*	95%
5:1T to 50:1	3.79 *(96)*	4.99 *(127)*	15 max	3.4 *(1.5)*	90%
60:1 to 500:1	4.48 *(114)*	5.68 *(144)*	15 max	3.8 *(1.6)*	85%

** AD = Adapter length.
Adapter length will vary depending on motor.
Call 1-888-55-4-MOTION for your free Motor Mounting Catalog.

All Dimensions are: inches (mm)

(TABLE 1) PERFORMANCE SPECIFICATIONS

	Part Number	Ratio[1]	5,000 HOUR LIFE T_r (1000 rpm) in-lb *(Nm)*	5,000 HOUR LIFE T_r (3000 rpm) in-lb *(Nm)*	5,000 HOUR LIFE T_r (5000 rpm) in-lb *(Nm)*	T_{peak} in-lb *(Nm)*	10,000 HOUR LIFE T_r (1000 rpm) in-lb *(Nm)*	10,000 HOUR LIFE T_r (3000 rpm) in-lb *(Nm)*	10,000 HOUR LIFE T_r (5000 rpm) in-lb *(Nm)*	J in-lb-sec² x10 -4 *(kg-cm²)*	Torsional Stiffness in-lb/arc-min (Nm/arc-min)
True Planetary and PowerTrue* Technology*	**NTR23-001**	1:1	59 (7)	54 (6)	49 (6)	195 (22)	54 (6)	50 (6)	45 (5)	7.01 (.79)	5.6 (0.6)
	NTR23-002	2:1	130 (15)	118 (13)	107 (12)	360 (41)	120 (14)	109 (12)	99 (11)	3.59 (.41)	8.5 (1.0)
	NTR23-003	3:1	83 (9)	75 (9)	68 (8)	270 (31)	76 (9)	70 (8)	63 (7)	3.09 (.35)	9.6 (1.1)
	NTR23-004	4:1	61 (7)	56 (6)	50 (6)	238 (27)	56 (6)	51 (6)	46 (5)	2.87 (.32)	10.1 (1.1)
	NTR23-005P	5:1P	50 (6)	46 (5)	41 (5)	180 (20)	46 (5)	42 (5)	38 (4)	2.81 (.32)	10.3 (1.2)
	NTR23-005T	5:1T	179 (20)	153 (17)	138 (16)	366 (41)	175 (20)	132 (15)	112 (13)	3.69 (.42)	10.3 (1.2)
	NTR23-006	6:1	153 (17)	130 (15)	126 (14)	366 (41)	149 (17)	120 (14)	116 (13)	3.67 (.41)	6.7 (0.8)
	NTR23-009	9:1	97 (11)	83 (9)	80 (9)	289 (33)	95 (11)	76 (9)	74 (8)	3.08 (.35)	8.5 (1.0)
	NTR23-010	10:1	157 (18)	144 (16)	130 (15)	366 (41)	155 (18)	138 (16)	120 (14)	3.48 (.39)	6.6 (0.7)
	NTR23-012	12:1	72 (8)	61 (7)	59 (7)	252 (28)	70 (8)	56 (6)	55 (6)	2.95 (.33)	9.3 (1.1)
	NTR23-015	15:1	100 (11)	91 (10)	83 (9)	297 (34)	99 (11)	88 (10)	76 (9)	2.89 (.33)	9.8 (1.1)
	NTR23-020	20:1	74 (8)	67 (8)	61 (7)	366 (41)	73 (8)	64 (7)	56 (6)	2.76 (.31)	9.3 (1.0)
	NTR23-025	25:1	60 (7)	55 (6)	50 (6)	198 (22)	60 (7)	53 (6)	46 (5)	2.71 (.31)	9.8 (1.1)
	NTR23-030	30:1	102 (12)	98 (11)	94 (11)	305 (34)	102 (11)	96 (11)	90 (10)	2.83 (.32)	8.0 (0.9)
	NTR23-040	40:1	75 (9)	72 (8)	69 (8)	263 (30)	75 (8)	71 (8)	67 (8)	2.69 (.30)	9.0 (1.0)
	NTR23-050	50:1	62 (7)	59 (7)	57 (6)	203 (23)	61 (7)	58 (7)	55 (6)	2.64 (.30)	9.6 (1.1)
	NTR23-060	60:1	163 (18)	161 (18)	158 (18)	366 (41)	163 (18)	160 (18)	157 (18)	3.68 (.42)	6.5 (0.7)
	NTR23-075	75:1	104 (12)	102 (12)	100 (11)	311 (35)	103 (12)	101 (11)	99 (11)	2.95 (.33)	8.4 (0.9)
	NTR23-090	90:1	104 (12)	102 (12)	101 (11)	313 (35)	103 (12)	102 (11)	100 (11)	3.09 (.35)	8.3 (0.9)
	NTR23-100	100:1	163 (18)	162 (18)	161 (18)	366 (41)	163 (18)	161 (18)	160 (18)	3.50 (.40)	6.5 (0.7)
	NTR23-120	120:1	76 (9)	75 (9)	74 (8)	270 (31)	76 (9)	75 (8)	73 (8)	2.96 (.33)	9.2 (1.0)
	NTR23-125	125:1	63 (7)	62 (7)	60 (7)	207 (23)	62 (7)	61 (7)	60 (7)	2.76 (.31)	9.7 (1.1)
	NTR23-150	150:1	104 (12)	103 (12)	102 (12)	316 (36)	104 (12)	103 (12)	102 (11)	2.91 (.33)	8.4 (0.9)
	NTR23-200	200:1	164 (19)	163 (18)	162 (18)	366 (41)	164 (18)	163 (18)	162 (18)	3.43 (.39)	6.1 (0.7)
	NTR23-250	250:1	63 (7)	62 (7)	62 (7)	207 (23)	63 (7)	62 (7)	61 (7)	2.72 (.31)	9.7 (1.1)
	NTR23-300	300:1	104 (12)	104 (12)	103 (12)	319 (36)	104 (12)	104 (12)	103 (12)	2.84 (.32)	8.0 (0.9)
	NTR23-400	400:1	77 (9)	76 (9)	76 (9)	274 (31)	77 (9)	76 (9)	76 (9)	2.71 (.31)	9.0 (1.0)
	NTR23-500	500:1	63 (7)	63 (7)	62 (7)	207 (23)	63 (7)	63 (7)	62 (7)	2.66 (.30)	9.6 (1.1)

[1] Ratios are exact, higher ratios are also available, consult factory.
T_r = Rated output torque at rated speed for specified hours of life.
J = Mass moment of inertia reflected to the input shaft (including pinion assembly).

For ordering information see inside back cover

See page 11 for gearhead selection criteria

THOMSON MICRON™
Leading in Motion Control Technology
☎1-888-55-4-MOTION•FAX 516-467-9814•www.thomsonindustries.com

The specifications and data in this publication are believed to be accurate and reliable. However, it is the responsibility of the product user to determine the suitability of Thomson Micron products for a specific application. While defective products will be replaced without charge if promptly returned, no liability is assumed beyond such replacement. © 1998 Thomson Micron, LLC
*Trademark of Thomson Industries, Inc. THOMSON is registered in the U.S. Patent and Trademark Office and in other countries.

NemaTRUE 90* Size 34 English

Right Angle Gearhead

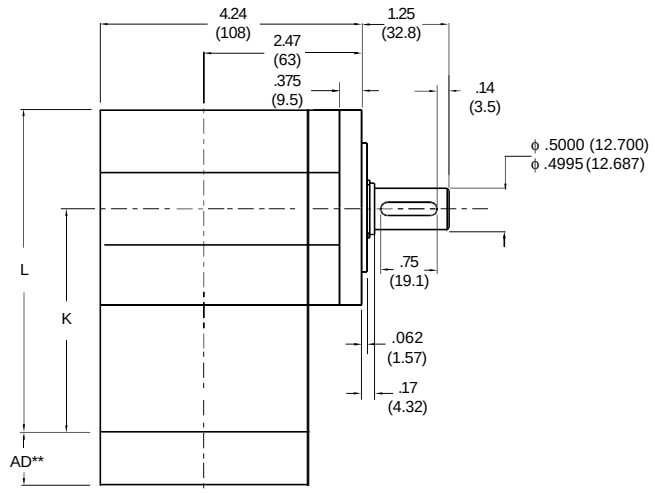

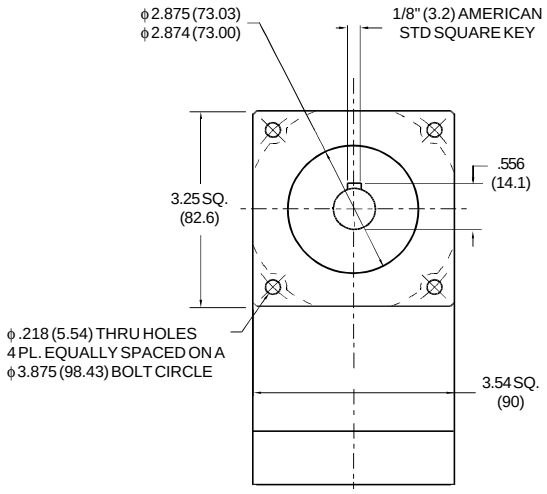

Ratio	Dimension 'K' in *(mm)*	Dimension 'L' in *(mm)*	Backlash (arc-min)	Weight lb *(Kg)*	Efficiency
1:1 to 5:1P	3.99 *(101)*	5.76 *(146)*	13 max	6.0 *(2.7)*	95%
5:1T to 50:1	4.89 *(124)*	6.66 *(169)*	15 max	7.4 *(3.4)*	90%
60:1 to 500:1	5.79 *(147)*	7.56 *(192)*	15 max	8.8 *(4.0)*	85%

**AD = Adapter length.
Adapter length will vary depending on motor.
Call 1-888-55-4-MOTION for your free Motor Mounting Catalog.

All Dimensions are: inches (mm)

(TABLE 1) PERFORMANCE SPECIFICATIONS

	Part Number	Ratio[1]	5,000 HOUR LIFE T_r (1000 rpm) in-lb *(Nm)*	5,000 HOUR LIFE T_r (3000 rpm) in-lb *(Nm)*	5,000 HOUR LIFE T_r (5000 rpm) in-lb *(Nm)*	T_{peak} in-lb *(Nm)*	10,000 HOUR LIFE T_r (1000 rpm) in-lb *(Nm)*	10,000 HOUR LIFE T_r (3000 rpm) in-lb *(Nm)*	10,000 HOUR LIFE T_r (5000 rpm) in-lb *(Nm)*	J in-lb-sec² x10 $^{-4}$ *(kg-cm²)*	Torsional Stiffness in-lb/arc-min (Nm/arc-min)
True Planetary and PowerTrue* Technology*	**NTR34-001**	1:1	168 (19)	153 (17)	139 (16)	493 (56)	155 (18)	142 (16)	128 (14)	27.5 (3.11)	12.6 (1.4)
	NTR34-002	2:1	381 (43)	348 (39)	315 (36)	1113 (126)	352 (40)	321 (36)	291 (33)	14.1 (1.59)	19.1 (2.2)
	NTR34-003	3:1	251 (28)	229 (26)	207 (23)	905 (102)	232 (26)	212 (24)	192 (22)	12.1 (1.37)	21.5 (2.4)
	NTR34-004	4:1	192 (22)	176 (20)	159 (18)	695 (79)	178 (20)	162 (18)	147 (17)	11.2 (1.27)	22.6 (2.5)
	NTR34-005P	5:1P	142 (16)	129 (15)	117 (13)	581 (66)	131 (15)	119 (13)	108 (12)	11.0 (1.25)	23.1 (2.6)
	NTR34-005T	5:1T	508 (57)	432 (49)	420 (47)	1113 (126)	497 (56)	399 (45)	387 (44)	14.5 (1.64)	23.1 (2.6)
	NTR34-006	6:1	448 (51)	381 (43)	370 (42)	1113 (126)	439 (50)	352 (40)	342 (39)	14.4 (1.63)	15.0 (1.7)
	NTR34-009	9:1	296 (33)	251 (28)	244 (28)	986 (111)	289 (33)	232 (26)	225 (25)	12.1 (1.37)	19.0 (2.1)
	NTR34-010	10:1	462 (52)	422 (48)	381 (43)	1113 (126)	456 (52)	404 (46)	352 (40)	13.7 (1.54)	14.8 (1.7)
	NTR34-012	12:1	226 (26)	192 (22)	187 (21)	752 (85)	221 (25)	178 (20)	173 (19)	11.6 (1.31)	20.9 (2.4)
	NTR34-015	15:1	305 (34)	278 (31)	251 (28)	1018 (115)	301 (34)	266 (30)	232 (26)	11.3 (1.28)	21.9 (2.5)
	NTR34-020	20:1	233 (26)	213 (24)	192 (22)	1113 (126)	230 (26)	204 (23)	178 (20)	10.8 (1.22)	20.8 (2.4)
	NTR34-025	25:1	172 (19)	157 (18)	142 (16)	635 (72)	169 (19)	150 (17)	131 (15)	10.6 (1.20)	21.9 (2.5)
	NTR34-030	30:1	311 (35)	298 (34)	285 (32)	1045 (118)	309 (35)	292 (33)	275 (31)	11.1 (1.25)	17.9 (2.0)
	NTR34-040	40:1	238 (27)	228 (26)	218 (25)	792 (89)	237 (27)	224 (25)	210 (24)	10.6 (1.19)	20.2 (2.3)
	NTR34-050	50:1	175 (20)	168 (19)	160 (18)	653 (74)	174 (20)	165 (19)	155 (18)	10.4 (1.17)	21.4 (2.4)
	NTR34-060	60:1	479 (54)	472 (53)	465 (53)	1113 (126)	478 (54)	469 (53)	460 (52)	14.4 (1.63)	14.5 (1.6)
	NTR34-075	75:1	315 (36)	310 (35)	305 (34)	1080 (122)	314 (36)	308 (35)	301 (34)	11.6 (1.31)	18.7 (2.1)
	NTR34-090	90:1	316 (36)	311 (35)	307 (35)	1085 (123)	315 (36)	309 (35)	304 (34)	12.1 (1.37)	18.6 (2.1)
	NTR34-100	100:1	480 (54)	476 (54)	472 (53)	1113 (126)	479 (54)	474 (54)	469 (53)	13.7 (1.55)	14.6 (1.7)
	NTR34-120	120:1	242 (27)	238 (27)	235 (27)	817 (92)	241 (27)	237 (27)	232 (26)	11.6 (1.31)	20.7 (2.3)
	NTR34-125	125:1	178 (20)	175 (20)	172 (19)	666 (75)	177 (20)	173 (20)	169 (19)	10.8 (1.23)	21.8 (2.5)
	NTR34-150	150:1	317 (36)	314 (35)	311 (35)	1096 (124)	316 (36)	313 (35)	309 (35)	11.4 (1.29)	18.7 (2.1)
	NTR34-200	200:1	481 (54)	479 (54)	477 (54)	1113 (126)	481 (54)	478 (54)	475 (54)	13.5 (1.52)	13.6 (1.5)
	NTR34-250	250:1	178 (20)	177 (20)	175 (20)	675 (76)	178 (20)	176 (20)	174 (20)	10.7 (1.21)	21.8 (2.5)
	NTR34-300	300:1	317 (36)	316 (36)	315 (36)	1107 (125)	317 (36)	315 (36)	314 (35)	11.1 (1.26)	17.9 (2.0)
	NTR34-400	400:1	243 (27)	242 (27)	241 (27)	832 (94)	243 (27)	241 (27)	240 (27)	10.6 (1.20)	20.2 (2.3)
	NTR34-500	500:1	179 (20)	178 (20)	177 (20)	680 (77)	179 (20)	178 (20)	177 (20)	10.4 (1.18)	21.4 (2.4)

[1] Ratios are exact, higher ratios are also available, consult factory.
T_r = Rated output torque at rated speed for specified hours of life.
J = Mass moment of inertia reflected to the input shaft (including pinion assembly).

For ordering information see inside back cover

See page 11 for gearhead selection criteria

The specifications and data in this publication are believed to be accurate and reliable. However, it is the responsibility of the product user to determine the suitability of Thomson Micron products for a specific application. While defective products will be replaced without charge if promptly returned, no liability is assumed beyond such replacement. © 1998 Thomson Micron, LLC
* Trademark of Thomson Industries, Inc. THOMSON is registered in the U.S. Patent and Trademark Office and in other countries.

NemaTRUE 90* Size 42 English

Right Angle Gearhead

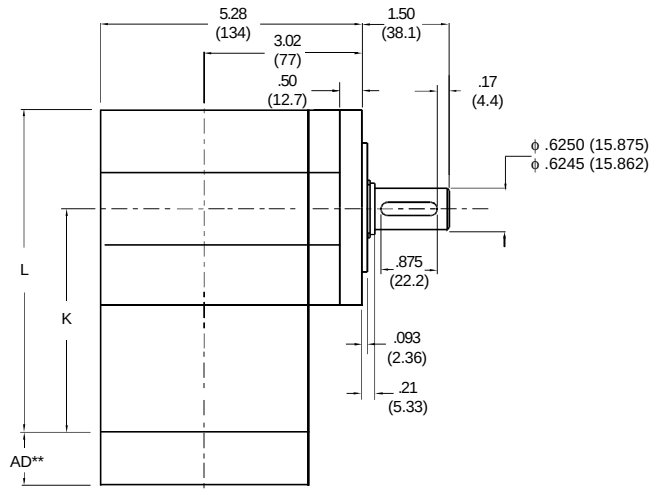

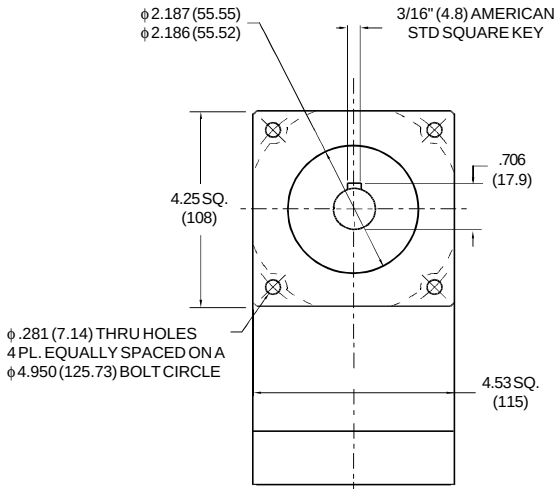

Ratio	Dimension 'K' in *(mm)*	Dimension 'L' in *(mm)*	Backlash (arc-min)	Weight lb *(Kg)*	Efficiency
1:1 to 5:1P	5.40 *(137)*	7.67 *(195)*	13 max	12 *(5.4)*	95%
5:1T to 50:1	6.63 *(168.4)*	8.90 *(226)*	15 max	14.8 *(6.7)*	90%
60:1 to 500:1	7.87 *(200)*	10.13 *(257)*	15 max	17.6 *(8.0)*	85%

** AD = Adapter length.
Adapter length will vary depending on motor.
Call 1-888-55-4-MOTION for your free Motor Mounting Catalog.

All Dimensions are: inches (mm)

(TABLE 1) PERFORMANCE SPECIFICATIONS

	Part Number	Ratio[1]	5,000 HOUR LIFE T_r (1000 rpm) in-lb *(Nm)*	5,000 HOUR LIFE T_r (3000 rpm) in-lb *(Nm)*	5,000 HOUR LIFE T_r (5000 rpm) in-lb *(Nm)*	T_{peak} in-lb *(Nm)*	10,000 HOUR LIFE T_r (1000 rpm) in-lb *(Nm)*	10,000 HOUR LIFE T_r (3000 rpm) in-lb *(Nm)*	10,000 HOUR LIFE T_r (5000 rpm) in-lb *(Nm)*	J in-lb-sec^2 x10^{-4}	Torsional Stiffness in-lb/arc-min (Nm/arc-min)
True Planetary and PowerTrue* Technology*	**NTR42-001**	1:1	496 (56)	452 (51)	409 (46)	1620 (183)	458 (52)	418 (47)	378 (43)	46.7 (5.28)	15.0 (1.7)
	NTR42-002	2:1	885 (100)	808 (91)	730 (83)	2255 (255)	817 (92)	746 (84)	674 (76)	23.9 (2.71)	24.7 (2.8)
	NTR42-003	3:1	687 (78)	627 (71)	567 (64)	2039 (230)	635 (72)	579 (65)	524 (59)	20.6 (2.33)	28.0 (3.2)
	NTR42-004	4:1	458 (52)	418 (47)	378 (43)	1584 (179)	423 (48)	386 (44)	349 (39)	19.1 (2.16)	29.4 (3.3)
	NTR42-005P	5:1P	343 (39)	313 (35)	283 (32)	1305 (147)	317 (36)	289 (33)	261 (30)	18.8 (2.12)	30.0 (3.4)
	NTR42-005T	5:1T	1346 (152)	1117 (126)	958 (108)	2255 (255)	1262 (143)	907 (102)	778 (88)	24.6 (2.78)	30.0 (3.4)
	NTR42-006	6:1	1041 (118)	885 (100)	859 (97)	2255 (255)	1018 (115)	817 (92)	794 (90)	24.5 (2.77)	20.1 (2.3)
	NTR42-009	9:1	808 (91)	687 (78)	667 (75)	2241 (253)	791 (89)	635 (72)	616 (70)	20.5 (2.32)	25.1 (2.8)
	NTR42-010	10:1	1072 (121)	979 (111)	885 (100)	2255 (255)	1059 (120)	938 (106)	817 (92)	23.2 (2.63)	20.1 (2.3)
	NTR42-012	12:1	538 (61)	458 (52)	444 (50)	1728 (195)	526 (59)	423 (48)	410 (46)	19.6 (2.22)	27.5 (3.1)
	NTR42-015	15:1	832 (94)	760 (86)	687 (78)	2255 (255)	822 (93)	728 (82)	635 (72)	19.3 (2.18)	28.8 (3.3)
	NTR42-020	20:1	554 (63)	506 (57)	458 (52)	2255 (255)	547 (62)	485 (55)	423 (48)	18.4 (2.08)	27.5 (3.1)
	NTR42-025	25:1	416 (47)	379 (43)	343 (39)	1458 (165)	410 (46)	364 (41)	317 (36)	18.0 (2.04)	28.8 (3.2)
	NTR42-030	30:1	851 (96)	814 (92)	778 (88)	2255 (255)	845 (96)	798 (90)	752 (85)	18.9 (2.13)	24.6 (2.8)
	NTR42-040	40:1	566 (64)	542 (61)	518 (59)	1836 (207)	563 (64)	532 (60)	500 (57)	18.0 (2.03)	27.2 (3.1)
	NTR42-050	50:1	425 (48)	407 (46)	388 (44)	1499 (169)	422 (48)	399 (45)	375 (42)	17.6 (1.99)	28.5 (3.2)
	NTR42-060	60:1	1111 (126)	1095 (124)	1080 (122)	2255 (255)	1109 (125)	1089 (123)	1069 (121)	24.6 (2.78)	19.7 (2.2)
	NTR42-075	75:1	861 (97)	847 (96)	832 (94)	2255 (255)	859 (97)	841 (95)	822 (93)	19.7 (2.22)	25.0 (2.8)
	NTR42-090	90:1	863 (97)	851 (96)	838 (95)	2255 (255)	861 (97)	845 (96)	830 (94)	20.6 (2.33)	24.8 (2.8)
	NTR42-100	100:1	1114 (126)	1105 (125)	1095 (124)	2255 (255)	1113 (126)	1101 (124)	1089 (123)	23.3 (2.64)	19.9 (2.2)
	NTR42-120	120:1	574 (65)	566 (64)	558 (63)	1897 (214)	573 (65)	563 (64)	552 (62)	19.7 (2.23)	27.3 (3.1)
	NTR42-125	125:1	430 (49)	423 (48)	416 (47)	1539 (174)	429 (48)	420 (47)	410 (46)	18.4 (2.08)	28.7 (3.2)
	NTR42-150	150:1	865 (98)	858 (97)	851 (96)	2255 (255)	864 (98)	855 (97)	845 (96)	19.4 (2.19)	25.0 (2.8)
	NTR42-200	200:1	1116 (126)	1112 (126)	1107 (125)	2255 (255)	1116 (126)	1110 (125)	1104 (125)	22.9 (2.59)	19.4 (2.2)
	NTR42-250	250:1	432 (49)	428 (48)	425 (48)	1562 (176)	431 (49)	427 (48)	422 (48)	18.1 (2.05)	28.7 (3.2)
	NTR42-300	300:1	867 (98)	863 (98)	860 (97)	2255 (255)	866 (98)	862 (97)	857 (97)	18.9 (2.14)	24.6 (2.8)
	NTR42-400	400:1	577 (65)	575 (65)	572 (65)	1944 (220)	577 (65)	574 (65)	571 (64)	18.1 (2.04)	27.1 (3.1)
	NTR42-500	500:1	433 (49)	431 (49)	429 (48)	1580 (178)	433 (49)	430 (49)	428 (48)	17.7 (2.00)	28.5 (3.2)

[1] Ratios are exact, higher ratios are also available, consult factory.
T_r = Rated output torque at rated speed for specified hours of life.
J = Mass moment of inertia reflected to the input shaft (including pinion assembly).

For ordering information see inside back cover

See page 11 for gearhead selection criteria

THOMSON MICRON™
Leading in Motion Control Technology
☎1-888-55-4-MOTION•FAX 516-467-9814•www.thomsonindustries.com

The specifications and data in this publication are believed to be accurate and reliable. However, it is the responsibility of the product user to determine the suitability of Thomson Micron products for a specific application. While defective products will be replaced without charge if promptly returned, no liability is assumed beyond such replacement. © 1998 Thomson Micron, LLC
* Trademark of Thomson Industries, Inc. THOMSON is registered in the U.S. Patent and Trademark Office and in other countries.

RADIAL AND AXIAL LOAD RATINGS (Table 2)

These graphs display the allowable radial load at a given distance (X) from the mounting surface based on an L_{10} life of 10,000 hours for the mean output speed, n_{mout}, as described on page 11.

NTR23 Radial Load Ratings

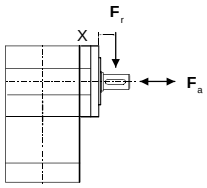

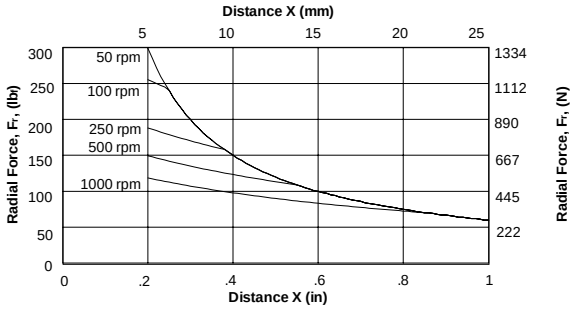

NTR23 Axial Load Ratings

Speed (rpm)	Axial Load, F_a lb_f *(N)*
50	250 (*1110*)
100	200 (*890*)
250	150 (*670*)
500	120 (*530*)
1000	90 (*400*)

NTR34 Radial Load Ratings

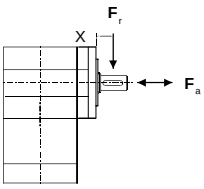

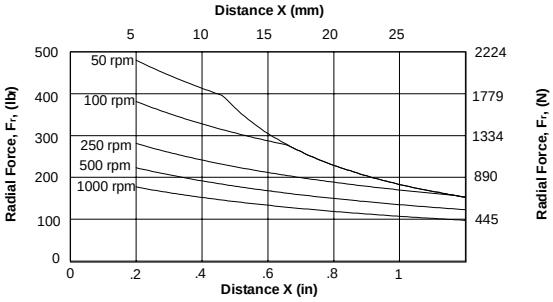

NTR34 Axial Load Ratings

Speed (rpm)	Axial Load, F_a lb_f *(N)*
50	340 (*1510*)
100	270 (*1200*)
250	200 (*890*)
500	160 (*710*)
1000	130 (*580*)

NTR42 Radial Load Ratings

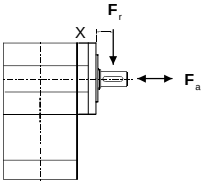

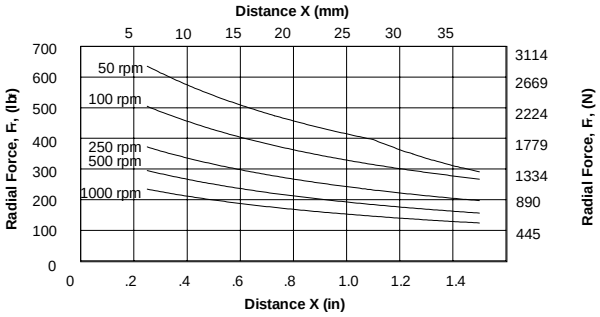

NTR42 Axial Load Ratings

Speed (rpm)	Axial Load, F_a lb_f *(N)*
50	460 (*2050*)
100	370 (*1650*)
250	270 (*1200*)
500	210 (*930*)
1000	170 (*760*)

The specifications and data in this publication are believed to be accurate and reliable. However, it is the responsibility of the product user to determine the suitability of Thomson Micron products for a specific application. While defective products will be replaced without charge if promptly returned, no liability is assumed beyond such replacement. © 1998 Thomson Micron, LLC
* Trademark of Thomson Industries, Inc. THOMSON is registered in the U.S. Patent and Trademark Office and in other countries.

Notes:

THOMSON MICRON™
Leading in Motion Control Technology
☎1-888-55-4-MOTION•FAX 516-467-9814•www.thomsonindustries.com

The specifications and data in this publication are believed to be accurate and reliable. However, it is the responsibility of the product user to determine the suitability of Thomson Micron products for a specific application. While defective products will be replaced without charge if promptly returned, no liability is assumed beyond such replacement. © 1998 Thomson Micron, LLC
* Trademark of Thomson Industries, Inc. THOMSON is registered in the U.S. Patent and Trademark Office and in other countries.

DuraTRUE*
TRUE PLANETARY Gearheads*

Ready for Immediate Delivery

Precision: 8 arc-minutes
Frame Sizes: 60, 90, 115, 142
Torque Capacity: up to 7377 in-lb

Ratio Availability: 3:1 thru 100:1
Radial load capacity: up to 2500 lb
Mounting system: RediMount*

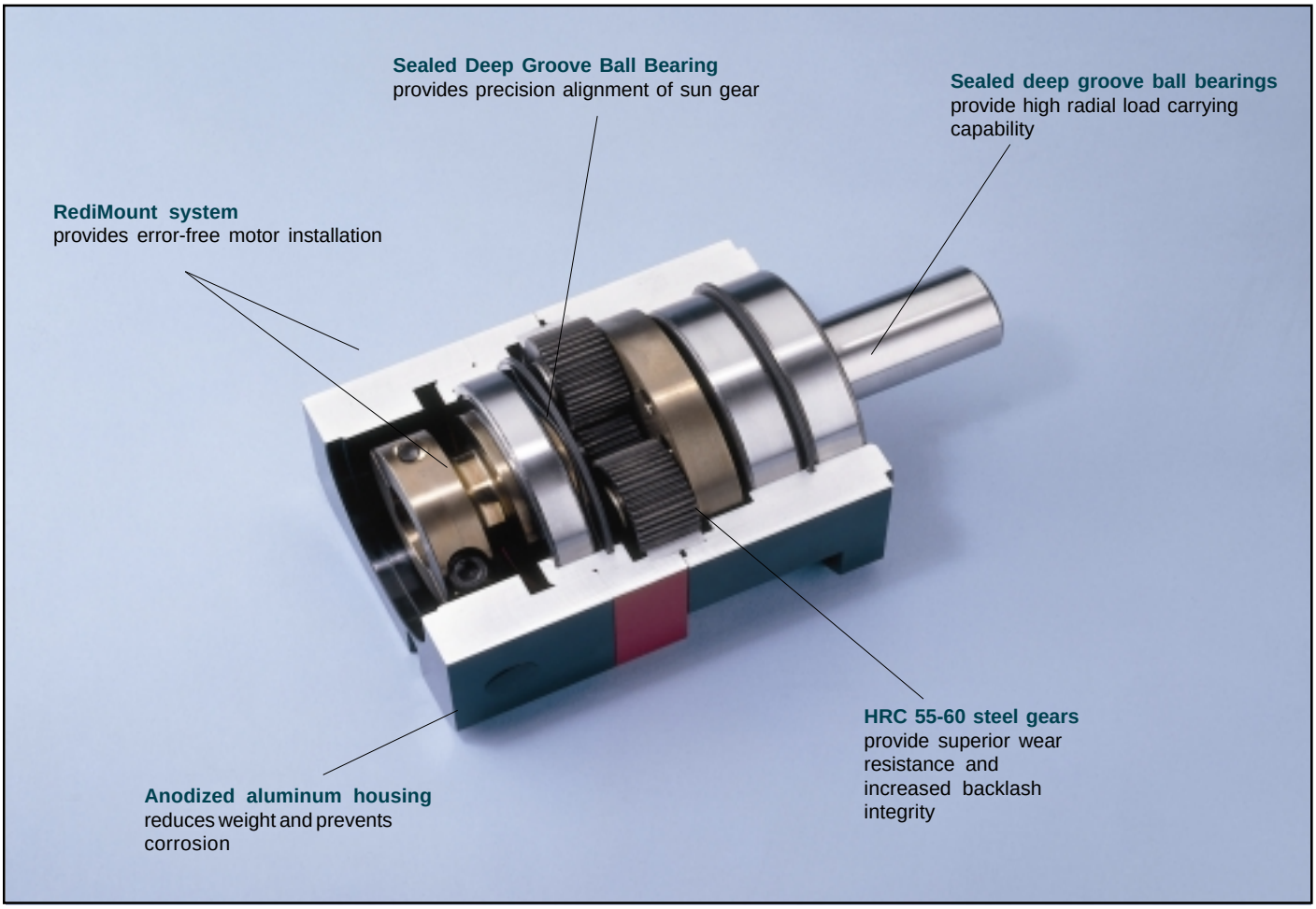

Index Page

DuraTRUE Size 60 Planetary Gearhead.....DT2
DuraTRUE Size 90 Planetary Gearhead.....DT3
DuraTRUE Size 115 Planetary Gearhead.....DT4
DuraTRUE Size 142 Planetary Gearhead.....DT5
Selection.....11
Mounting Tools.....80
Ordering.....Inside Back Cover
Free motor mounting book.....Call 1-888-55-4-Motion

The specifications and data in this publication are believed to be accurate and reliable. However, it is the responsibility of the product user to determine the suitability of Thomson Micron products for a specific application. While defective products will be replaced without charge if promptly returned, no liability is assumed beyond such replacement. © 1998 Thomson Micron, LLC
* Trademark of Thomson Industries, Inc. THOMSON is registered in the U.S. Patent Office and in other countries.

THOMSON MICRON
Leading in Motion Control Technology
☎1-888-55-4-MOTION•FAX 516-467-9814•www.thomsonindustries.com

DuraTRUE * Size 60
TRUE PLANETARY Gearhead* Metric

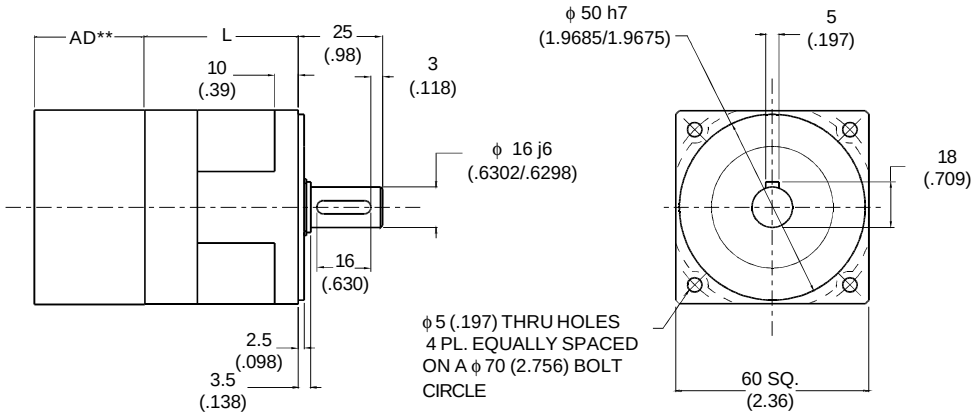

Ratio	Dimension 'L' mm *(in)*	Backlash (arc-min)	Weight kg *(lb)*	Efficiency
3:1 to 10:1	53 (2.07)	8 max	1.0 (2.2)	90%
15:1 to 100:1	70 (2.76)	9 max	1.2 (2.7)	85%

** AD = Adapter length.
Adapter length will vary depending on motor.
Call 1-888-55-4-MOTION for your free Motor Mounting Catalog.

All Dimensions are: mm (inches)

Figure DT60

(TABLE 1) PERFORMANCE SPECIFICATIONS

Part Number	Ratio[1]	5,000 HOUR LIFE				T_{peak} Nm *(in-lb)*	10,000 HOUR LIFE				J kg-cm² *(in-lb-sec² x 10⁻⁴)*	Torsional Stiffness Nm/arc-min *(in-lb/arc-min)*
		T_r (1000 rpm) Nm *(in-lb)*	T_r (2000 rpm) Nm *(in-lb)*	T_r (3000 rpm) Nm *(in-lb)*	T_r (4000 rpm) Nm *(in-lb)*		T_r (1000 rpm) Nm *(in-lb)*	T_r (2000 rpm) Nm *(in-lb)*	T_r (3000 rpm) Nm *(in-lb)*	T_r (4000 rpm) Nm *(in-lb)*		
DT60-003	3:1	15 *(134)*	12 *(109)*	11 *(97)*	10 *(89)*	52 *(460)*	12 *(109)*	10 *(89)*	9 *(79)*	8 *(72)*	.52 *(4.6)*	.9 *(8.1)*
DT60-005	5:1	17 *(148)*	14 *(120)*	12 *(106)*	11 *(98)*	46 *(410)*	14 *(120)*	11 *(98)*	10 *(86)*	9 *(79)*	.46 *(4.1)*	.9 *(7.9)*
DT60-010	10:1	15 *(134)*	14 *(121)*	13 *(114)*	12 *(108)*	45 *(400)*	14 *(124)*	13 *(112)*	11 *(100)*	10 *(92)*	.44 *(3.9)*	.8 *(6.8)*
DT60-015	15:1	25 *(218)*	20 *(177)*	18 *(157)*	16 *(144)*	52 *(460)*	20 *(177)*	16 *(144)*	14 *(127)*	13 *(117)*	.46 *(4.1)*	.9 *(8.2)*
DT60-025	25:1	24 *(214)*	22 *(195)*	19 *(172)*	18 *(158)*	52 *(456)*	22 *(195)*	18 *(158)*	16 *(140)*	15 *(128)*	.46 *(4.1)*	.9 *(8.3)*
DT60-030	30:1	28 *(246)*	25 *(218)*	22 *(193)*	20 *(177)*	52 *(460)*	25 *(218)*	20 *(177)*	18 *(157)*	16 *(144)*	.44 *(3.9)*	1.0 *(8.7)*
DT60-050	50:1	25 *(222)*	24 *(214)*	24 *(209)*	22 *(195)*	52 *(460)*	25 *(217)*	22 *(195)*	19 *(172)*	18 *(158)*	.44 *(3.9)*	.9 *(8.2)*
DT60-100	100:1	20 *(180)*	19 *(165)*	18 *(157)*	17 *(151)*	51 *(447)*	19 *(167)*	17 *(153)*	16 *(145)*	16 *(140)*	.44 *(3.9)*	.9 *(7.8)*

[1] Ratios are exact, higher ratios are also available, consult factory.
T_r = Rated output torque at rated speed for specified hours of life.
J = Mass moment of inertia reflected to the input shaft (including pinion assembly).

For ordering information see inside back cover

See page 11 for gearhead selection criteria

(TABLE 2) RADIAL AND AXIAL LOAD RATINGS

These graphs display the allowable radial load at a given distance (X) from the mounting surface based on an L_{10} life of 10,000 hours for the mean output speed, n_{mout}, as described on page 11.

DT60 Radial Loadings

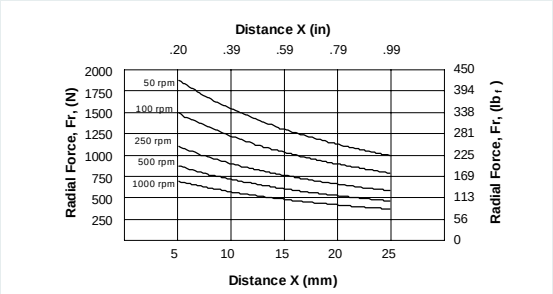

DT60 Axial Loadings

Speed (rpm)	Axial Load, F_a N (lb$_f$)
50	3075 *(692)*
100	2441 *(549)*
250	1798 *(405)*
500	1427 *(321)*
1000	1133 *(255)*

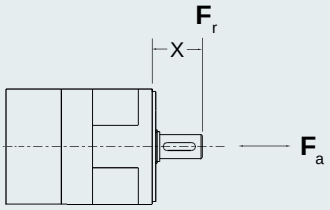

THOMSON MICRON*
Leading in Motion Control Technology
☎1-888-55-4-MOTION•FAX 516-467-9814•www.thomsonindustries.com

The specifications and data in this publication are believed to be accurate and reliable. However, it is the responsibility of the product user to determine the suitability of Thomson Micron products for a specific application. While defective products will be replaced without charge if promptly returned, no liability is assumed beyond such replacement. © 1998 Thomson Micron, LLC
* Trademark of Thomson Industries, Inc. THOMSON is registered in the U.S. Patent Office and in other countries.

DuraTRUE* Size 90
TRUE PLANETARY Gearhead* Metric

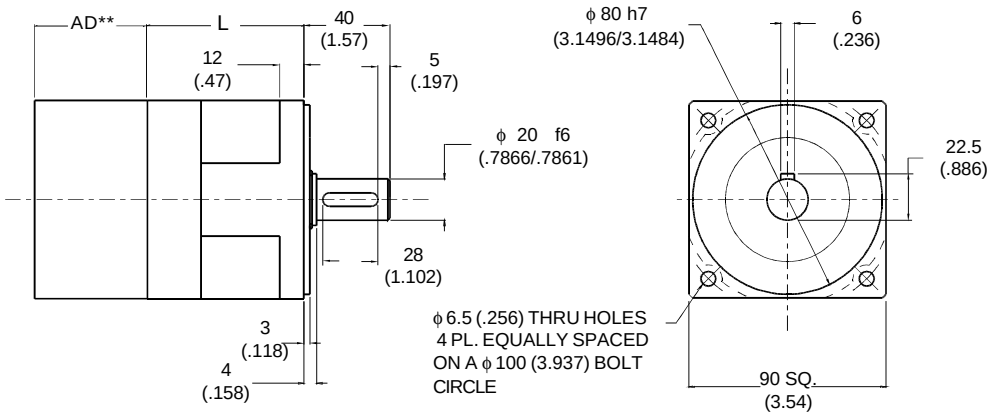

Ratio	Dimension 'L' mm *(in)*	Backlash (arc-min)	Weight kg *(lb)*	Efficiency
3:1 to 10:1	67 (2.63)	8 max	3.0 (6.6)	90%
15:1 to 100:1	90 (3.53)	9 max	3.7 (8.1)	85%

** AD = Adapter length.
Adapter length will vary depending on motor.
Call 1-888-55-4-MOTION for your free Motor Mounting Catalog.

All Dimensions are: mm (inches)

Figure DT90

(TABLE 1) PERFORMANCE SPECIFICATIONS

Part Number	Ratio[1]	5,000 HOUR LIFE				T_{peak}	10,000 HOUR LIFE				J	Torsional Stiffness
		T_r (1000 rpm) Nm *(in-lb)*	T_r (2000 rpm) Nm *(in-lb)*	T_r (3000 rpm) Nm *(in-lb)*	T_r (4000 rpm) Nm *(in-lb)*	Nm *(in-lb)*	T_r (1000 rpm) Nm *(in-lb)*	T_r (2000 rpm) Nm *(in-lb)*	T_r (3000 rpm) Nm *(in-lb)*	T_r (4000 rpm) Nm *(in-lb)*	kg-cm² *(in-lb-sec² x 10⁻³)*	Nm/arc-min *(in-lb/arc-min)*
DT90-003	3:1	69 *(614)*	56 *(499)*	50 *(442)*	46 *(405)*	167 *(1479)*	56 *(499)*	46 *(405)*	41 *(359)*	37 *(329)*	2.22 *(1.97)*	4.9 *(43.3)*
DT90-005	5:1	75 *(664)*	62 *(549)*	55 *(486)*	50 *(446)*	157 *(1385)*	62 *(549)*	50 *(446)*	45 *(395)*	41 *(362)*	1.76 *(1.56)*	4.8 *(42.9)*
DT90-010	10:1	55 *(488)*	50 *(439)*	46 *(411)*	44 *(392)*	157 *(1390)*	51 *(452)*	46 *(407)*	43 *(381)*	41 *(363)*	1.63 *(1.44)*	4.0 *(35.6)*
DT90-015	15:1	93 *(826)*	84 *(747)*	79 *(702)*	74 *(657)*	167 *(1479)*	86 *(764)*	74 *(657)*	66 *(582)*	60 *(534)*	1.78 *(1.58)*	4.9 *(43.7)*
DT90-025	25:1	84 *(747)*	81 *(714)*	78 *(693)*	77 *(677)*	167 *(1479)*	83 *(730)*	79 *(698)*	72 *(640)*	66 *(587)*	1.77 *(1.56)*	5.0 *(44.5)*
DT90-030	30:1	103 *(908)*	93 *(826)*	88 *(780)*	84 *(747)*	167 *(1479)*	95 *(840)*	86 *(764)*	81 *(716)*	74 *(657)*	1.64 *(1.45)*	4.9 *(43.4)*
DT90-050	50:1	88 *(776)*	84 *(747)*	82 *(728)*	81 *(714)*	167 *(1479)*	86 *(759)*	83 *(730)*	81 *(712)*	79 *(698)*	1.63 *(1.45)*	5.0 *(44.3)*
DT90-100	100:1	75 *(663)*	69 *(608)*	65 *(576)*	63 *(555)*	167 *(1479)*	69 *(613)*	64 *(562)*	60 *(533)*	58 *(513)*	1.63 *(1.45)*	4.4 *(38.5)*

[1] Ratios are exact, higher ratios are also available, consult factory.
T_r = Rated output torque at rated speed for specified hours of life.
J = Mass moment of inertia reflected to the input shaft (including pinion assembly).

For ordering information see inside back cover

See page 11 for gearhead selection criteria

(TABLE 2) RADIAL AND AXIAL LOAD RATINGS

These graphs display the allowable radial load at a given distance (X) from the mounting surface based on an L_{10} life of 10,000 hours for the mean output speed, n_{mout}, as described on page 11.

DT90 Radial Loadings

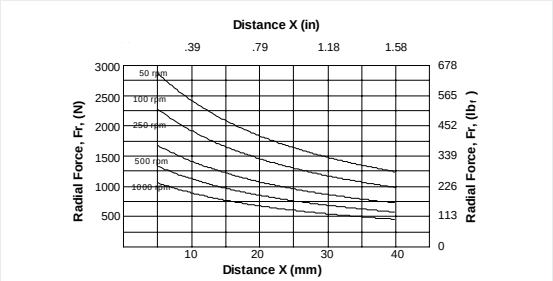

DT90 Axial Loadings

Speed (rpm)	Axial Load, F_a N (lb$_f$)
50	4506 *(1014)*
100	3576 *(805)*
250	2635 *(593)*
500	2091 *(471)*
1000	1660 *(373)*

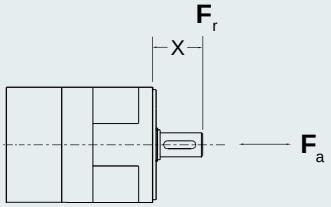

The specifications and data in this publication are believed to be accurate and reliable. However, it is the responsibility of the product user to determine the suitability of Thomson Micron products for a specific application. While defective products will be replaced without charge if promptly returned, no liability is assumed beyond such replacement. © 1998 Thomson Micron, LLC
* Trademark of Thomson Industries, Inc. THOMSON is registered in the U.S. Patent Office and in other countries.

THOMSON MICRON
Leading in Motion Control Technology
☎1-888-55-4-MOTION•FAX 516-467-9814•www.thomsonindustries.com

DuraTRUE* Size 115
*TRUE PLANETARY** Gearhead

Metric

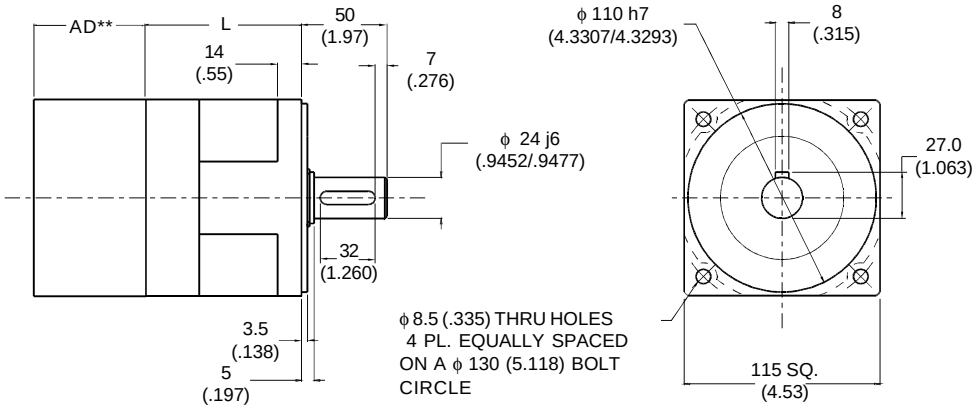

Ratio	Dimension 'L' mm *(in)*	Backlash (arc-min)	Weight kg *(lb)*	Efficiency
3:1 to 10:1	88 (3.46)	8 max	5.7 (12.7)	90%
15:1 to 100:1	119 (4.69)	9 max	7.3 (16.2)	85%

** AD = Adapter length.
Adapter length will vary depending on motor.
Call 1-888-55-4-MOTION for your free Motor Mounting Catalog.

All Dimensions are: mm (inches)

Figure DT115

(TABLE 1) PERFORMANCE SPECIFICATIONS

Part Number	Ratio[1]	5,000 HOUR LIFE				T_{peak}	10,000 HOUR LIFE				J	Torsional Stiffness
		T_r (1000 rpm) Nm *(in-lb)*	T_r (2000 rpm) Nm *(in-lb)*	T_r (3000 rpm) Nm *(in-lb)*	T_r (4000 rpm) Nm *(in-lb)*	Nm *(in-lb)*	T_r (1000 rpm) Nm *(in-lb)*	T_r (2000 rpm) Nm *(in-lb)*	T_r (3000 rpm) Nm *(in-lb)*	T_r (4000 rpm) Nm *(in-lb)*	kg-cm² *(in-lb-sec² x 10⁻³)*	Nm/arc-min *(in-lb/arc-min)*
DT115-003	3:1	105 *(932)*	86 *(757)*	76 *(670)*	70 *(615)*	284 *(2511)*	86 *(757)*	70 *(615)*	62 *(544)*	56 *(499)*	4.39 *(3.88)*	13.9 *(123.4)*
DT115-005	5:1	116 *(1025)*	91 *(803)*	83 *(738)*	77 *(677)*	284 *(2511)*	94 *(833)*	77 *(677)*	68 *(599)*	62 *(550)*	2.88 *(2.55)*	13.6 *(120.8)*
DT115-010	10:1	90 *(796)*	81 *(715)*	76 *(668)*	72 *(635)*	284 *(2511)*	83 *(737)*	75 *(661)*	70 *(618)*	66 *(588)*	2.47 *(2.18)*	11.6 *(102.4)*
DT115-015	15:1	171 *(1510)*	139 *(1226)*	123 *(1086)*	113 *(996)*	284 *(2511)*	139 *(1226)*	113 *(996)*	100 *(882)*	91 *(809)*	2.95 *(2.61)*	12.9 *(114.1)*
DT115-025	25:1	167 *(1474)*	153 *(1350)*	135 *(1195)*	124 *(1096)*	284 *(2511)*	153 *(1350)*	124 *(1096)*	110 *(971)*	101 *(891)*	2.90 *(2.57)*	14.1 *(125.0)*
DT115-030	30:1	203 *(1794)*	171 *(1510)*	151 *(1337)*	139 *(1226)*	284 *(2511)*	171 *(1510)*	139 *(1226)*	123 *(1086)*	113 *(996)*	2.48 *(2.20)*	14.1 *(124.4)*
DT115-050	50:1	173 *(1535)*	167 *(1474)*	162 *(1435)*	153 *(1350)*	284 *(2511)*	170 *(1501)*	153 *(1350)*	135 *(1195)*	124 *(1096)*	2.47 *(2.19)*	14.1 *(125.0)*
DT115-100	100:1	123 *(1087)*	112 *(995)*	107 *(943)*	103 *(907)*	284 *(2511)*	114 *(1006)*	104 *(921)*	99 *(873)*	95 *(840)*	2.47 *(2.19)*	11.4 *(100.6)*

[1] Ratios are exact, higher ratios are also available, consult factory.
T_r = Rated output torque at rated speed for specified hours of life.
J = Mass moment of inertia reflected to the input shaft (including pinion assembly).

For ordering information see inside back cover

See page 11 for gearhead selection criteria

(TABLE 2) RADIAL AND AXIAL LOAD RATINGS

These graphs display the allowable radial load at a given distance (X) from the mounting surface based on an L_{10} life of 10,000 hours for the mean output speed, n_{mout}, as described on page 11.

DT115 Radial Loadings

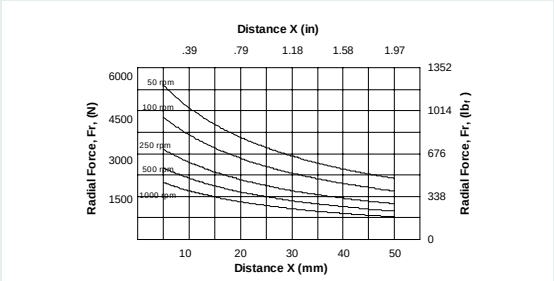

DT115 Axial Loadings

Speed (rpm)	Axial Load, F_a N	(lb_f)
50	8196	*(1844)*
100	6505	*(1464)*
250	4793	*(1078)*
500	3804	*(856)*
1000	3019	*(679)*

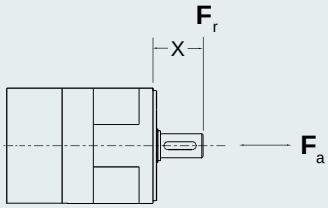

THOMSON MICRON*
Leading in Motion Control Technology
☎1-888-55-4-MOTION•FAX 516-467-9814•www.thomsonindustries.com

The specifications and data in this publication are believed to be accurate and reliable. However, it is the responsibility of the product user to determine the suitability of Thomson Micron products for a specific application. While defective products will be replaced without charge if promptly returned, no liability is assumed beyond such replacement. © 1998 Thomson Micron, LLC
* Trademark of Thomson Industries, Inc. THOMSON is registered in the U.S. Patent Office and in other countries.

DuraTRUE* Size 142
*TRUE PLANETARY** Gearhead — Metric

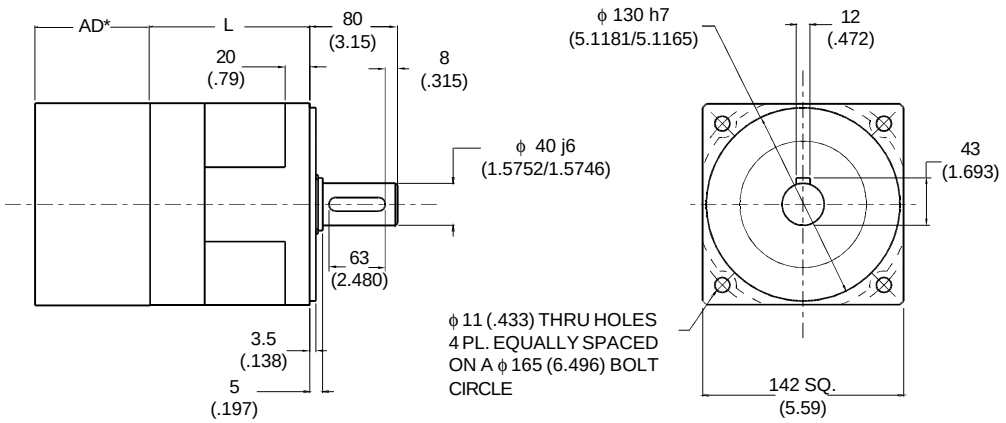

Ratio	Dimension 'L' mm *(in)*	Backlash (arc-min)	Weight kg *(lb)*	Efficiency
3:1 to 10:1	121 (4.77)	8 max	12.8(28.3)	90%
15:1 to 100:1	170 (6.71)	9 max	17.2(38.0)	85%

* AD = Adapter length.
Adapter length will vary depending on motor.
Call 1-888-55-4-MOTION for your free Motor Mounting Catalog.

All Dimensions are: mm (inches)

Figure DT142

(TABLE 1) PERFORMANCE SPECIFICATIONS

Part Number	Ratio[1]	5,000 HOUR LIFE				T_{peak}	10,000 HOUR LIFE				J	Torsional Stiffness
		T_r (1000 rpm) Nm *(in-lb)*	T_r (2000 rpm) Nm *(in-lb)*	T_r (3000 rpm) Nm *(in-lb)*	T_r (4000 rpm) Nm *(in-lb)*	Nm *(in-lb)*	T_r (1000 rpm) Nm *(in-lb)*	T_r (2000 rpm) Nm *(in-lb)*	T_r (3000 rpm) Nm *(in-lb)*	T_r (4000 rpm) Nm *(in-lb)*	kg-cm² *(in-lb-sec² x 10⁻²)*	Nm/arc-min *(in-lb/arc-min)*
DT142-003	3:1	372 *(3289)*	302 *(2671)*	267 *(2365)*	245 *(2170)*	834 *(7377)*	302 *(2671)*	245 *(2170)*	217 *(1921)*	199 *(1762)*	23.2 *(2.05)*	51.8 *(458.7)*
DT142-005	5:1	410 *(3625)*	333 *(2944)*	295 *(2607)*	270 *(2391)*	834 *(7377)*	333 *(2944)*	270 *(2391)*	239 *(2118)*	219 *(1942)*	14.7 *(1.30)*	52.6 *(465.1)*
DT142-010	10:1	229 *(2022)*	204 *(1808)*	190 *(1685)*	181 *(1598)*	834 *(7377)*	211 *(1871)*	189 *(1673)*	176 *(1559)*	167 *(1479)*	12.1 *(1.07)*	41.3 *(365.1)*
DT142-015	15:1	524 *(4634)*	471 *(4167)*	433 *(3833)*	397 *(3516)*	834 *(7377)*	484 *(4287)*	397 *(3516)*	352 *(3114)*	323 *(2856)*	15.1 *(1.34)*	59.6 *(527.6)*
DT142-025	25:1	480 *(4248)*	456 *(4038)*	441 *(3903)*	430 *(3801)*	834 *(7377)*	469 *(4154)*	438 *(3876)*	388 *(3432)*	356 *(3148)*	14.8 *(1.31)*	57.7 *(510.6)*
DT142-030	30:1	578 *(5113)*	524 *(4634)*	493 *(4359)*	471 *(4167)*	834 *(7377)*	535 *(4731)*	484 *(4287)*	433 *(3833)*	397 *(3516)*	12.2 *(1.08)*	59.9 *(529.9)*
DT142-050	50:1	501 *(4435)*	480 *(4248)*	466 *(4128)*	456 *(4038)*	834 *(7377)*	490 *(4336)*	469 *(4154)*	456 *(4037)*	438 *(3876)*	12.1 *(1.07)*	57.8 *(511.1)*
DT142-100	100:1	314 *(2782)*	287 *(2543)*	272 *(2408)*	262 *(2314)*	834 *(7377)*	291 *(2574)*	266 *(2353)*	252 *(2228)*	242 *(2141)*	12.1 *(1.07)*	42.9 *(379.5)*

[1] Ratios are exact, higher ratios are also available, consult factory.
T_r = Rated output torque at rated speed for specified hours of life.
J = Mass moment of inertia reflected to the input shaft (including pinion assembly).

For ordering information see inside back cover

See page 11 for gearhead selection criteria

(TABLE 2) RADIAL AND AXIAL LOAD RATINGS

These graphs display the allowable radial load at a given distance (X) from the mounting surface based on an L_{10} life of 10,000 hours for the mean output speed, n_{mout}, as described on page 11.

DT142 Radial Loadings

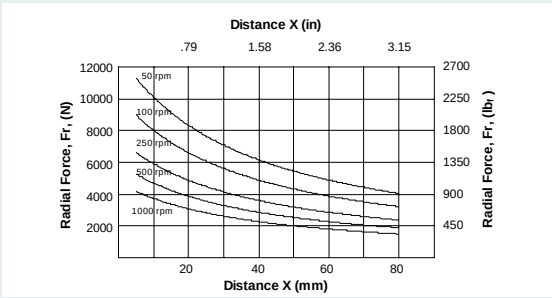

DT142 Axial Loadings

Speed (rpm)	Axial Load, F_a N	(lbf)
50	17,023	*(3830)*
100	13,511	*(3040)*
250	9956	*(2240)*
500	7902	*(1778)*
1000	6271	*(1411)*

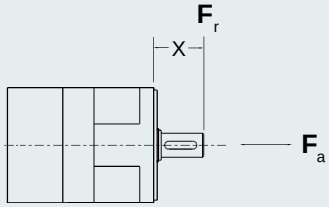

The specifications and data in this publication are believed to be accurate and reliable. However, it is the responsibility of the product user to determine the suitability of Thomson Micron products for a specific application. While defective products will be replaced without charge if promptly returned, no liability is assumed beyond such replacement. © 1998 Thomson Micron, LLC
* Trademark of Thomson Industries, Inc. THOMSON is registered in the U.S. Patent Office and in other countries.

THOMSON MICRON
Leading in Motion Control Technology
☎1-888-55-4-MOTION•FAX 516-467-9814•www.thomsonindustries.com

Notes:

THOMSON MICRON*
Leading in Motion Control Technology
☎1-888-55-4-MOTION•FAX 516-467-9814•www.thomsonindustries.com

The specifications and data in this publication are believed to be accurate and reliable. However, it is the responsibility of the product user to determine the suitability of Thomson Micron products for a specific application. While defective products will be replaced without charge if promptly returned, no liability is assumed beyond such replacement. © 1998 Thomson Micron, LLC
* Trademark of Thomson Industries, Inc. THOMSON is registered in the U.S. Patent Office and in other countries.

DuraTRUE 90*
Right Angle Gearheads

Ready for Immediate Delivery

Precision: 8 arc-minutes
Frame Sizes: 60, 90, 115, 142
Torque Capacity: up to 7659 in-lb

Ratio Availability: 1:1 thru 500:1
Radial load capacity: up to 2500 lb
Mounting system: RediMount*

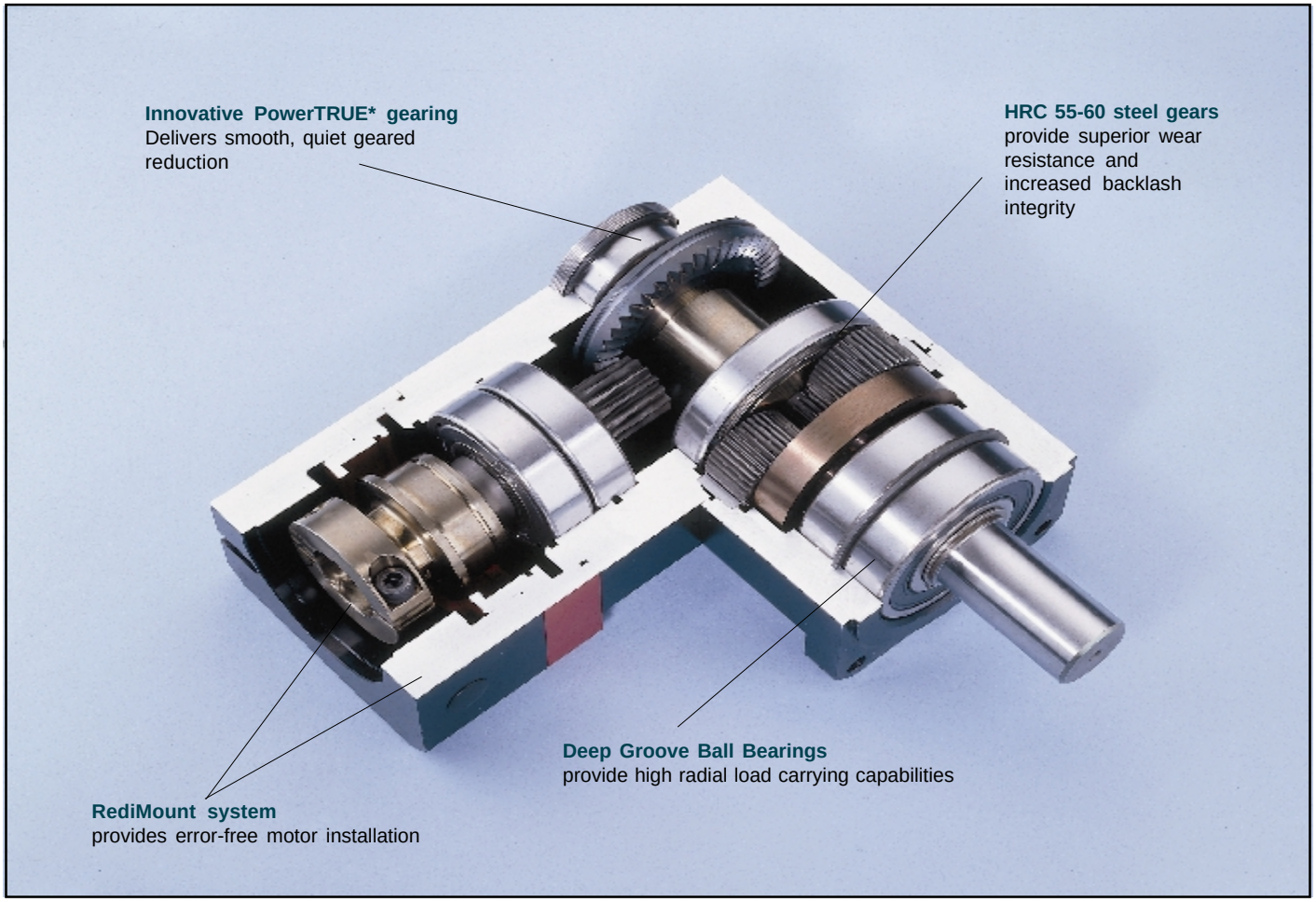

Index Page

DuraTRUE 90 Size 60 Planetary Gearhead.....DTR2
DuraTRUE 90 Size 90 Planetary Gearhead.....DTR3
DuraTRUE 90 Size 115 Planetary Gearhead.....DTR4
DuraTRUE 90 Size 142 Planetary Gearhead.....DTR5
Selection.....11
Mounting Tools.....80
Ordering.....Inside Back Cover
Free motor mounting book.....Call 1-888-55-4-Motion

The specifications and data in this publication are believed to be accurate and reliable. However, it is the responsibility of the product user to determine the suitability of Thomson Micron products for a specific application. While defective products will be replaced without charge if promptly returned, no liability is assumed beyond such replacement. © 1998 Thomson Micron, LLC
* Trademark of Thomson Industries, Inc. THOMSON is registered in the U.S. Patent and Trademark Office and in other countries.

DuraTRUE 90* Size 60
Right Angle Gearhead Metric

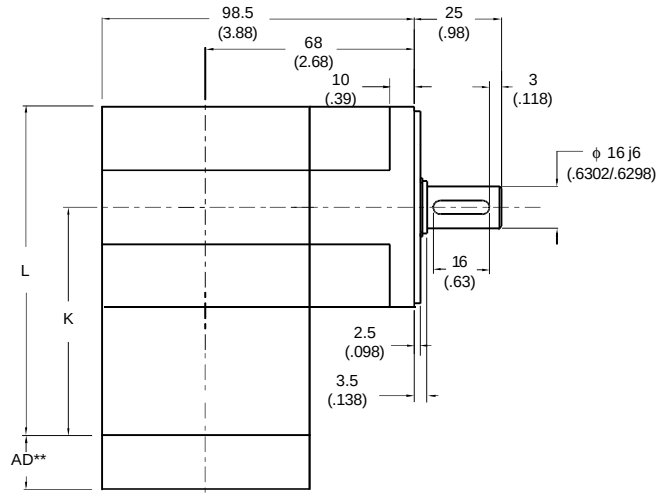

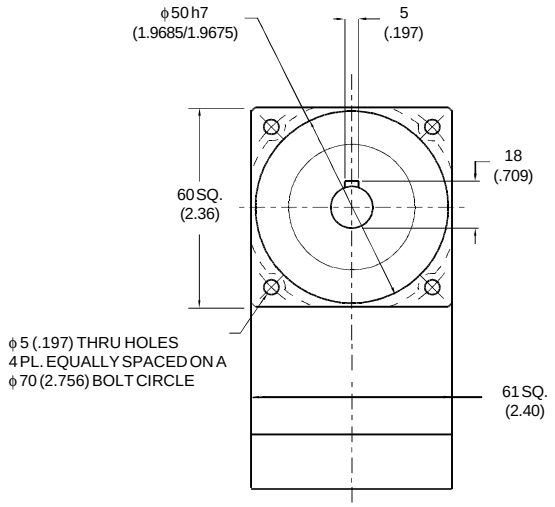

Ratio	Dimension 'K' mm *(in)*	Dimension 'L' mm *(in)*	Backlash (arc-min)	Weight Kg *(lb)*	Efficiency
5:1 to 50:1	79 *(3.11)*	109.5 *(4.31)*	9 max	2.5 *(5.5)*	90%
60:1 to 500:1	96 *(3.79)*	127 *(4.99)*	9 max	2.7 *(6)*	85%

** AD = Adapter length.
Adapter length will vary depending on motor.
Call 1-888-55-4-MOTION for your free Motor Mounting Catalog.

All Dimensions are: mm (inches)

(TABLE 1) PERFORMANCE SPECIFICATIONS

	Part Number	Ratio[1]	5,000 HOUR LIFE T_r (1000 rpm) Nm *(in-lb)*	5,000 HOUR LIFE T_r (3000 rpm) Nm *(in-lb)*	5,000 HOUR LIFE T_r (5000 rpm) Nm *(in-lb)*	T_{peak} Nm *(in-lb)*	10,000 HOUR LIFE T_r (1000 rpm) Nm *(in-lb)*	10,000 HOUR LIFE T_r (3000 rpm) Nm *(in-lb)*	10,000 HOUR LIFE T_r (5000 rpm) Nm *(in-lb)*	J kg-cm² *(in-lb-sec² x10 ⁻⁴)*	Torsional Stiffness Nm/arc-min *(in-lb/arc-min)*
True Planetary* and PowerTrue* Technology	**DTR60-005**	5:1	18 (157)	13 (113)	11 (97)	52 (460)	14 (127)	10 (92)	9 (79)	.42 (3.7)	3.3 (20.1)
	DTR60-006	6:1	19 (166)	13 (119)	12 (102)	52 (460)	15 (134)	11 (97)	9 (83)	.42 (3.7)	2.3 (20.3)
	DTR60-009	9:1	21 (187)	15 (134)	13 (115)	52 (460)	17 (152)	12 (109)	11 (94)	.36 (3.1)	2.3 (20.2)
	DTR60-010	10:1	21 (182)	15 (131)	13 (112)	49 (435)	17 (148)	12 (106)	10 (91)	.41 (3.5)	2.3 (20.2)
	DTR60-012	12:1	18 (161)	17 (147)	14 (126)	45 (402)	18 (161)	13 (119)	12 (102)	.33 (3.0)	2.3 (20.4)
	DTR60-015	15:1	23 (206)	17 (148)	14 (127)	50 (445)	19 (167)	14 (120)	12 (103)	.32 (2.9)	2.3 (20.4)
	DTR60-020	20:1	24 (211)	18 (161)	16 (138)	51 (450)	21 (182)	15 (131)	13 (112)	.33 (2.8)	2.3 (20.3)
	DTR60-025	25:1	24 (214)	19 (172)	17 (148)	51 (455)	22 (195)	16 (140)	14 (120)	.32 (2.7)	2.3 (20.3)
	DTR60-030	30:1	18 (155)	15 (134)	14 (124)	49 (430)	16 (143)	14 (124)	13 (115)	.35 (2.8)	1.7 (14.8)
	DTR60-040	40:1	18 (161)	16 (139)	15 (130)	49 (430)	17 (149)	15 (129)	14 (120)	.33 (2.7)	1.7 (14.8)
	DTR60-050	50:1	19 (165)	16 (143)	15 (134)	49 (430)	17 (153)	15 (133)	14 (124)	.32 (2.6)	1.7 (14.8)
	DTR60-060	60:1	28 (244)	18 (155)	15 (133)	52 (460)	20 (175)	14 (126)	12 (108)	.42 (3.7)	2.3 (20.2)
	DTR60-075	75:1	28 (248)	20 (178)	17 (153)	50 (445)	23 (201)	16 (144)	14 (124)	.35 (3.0)	2.3 (20.2)
	DTR60-090	90:1	28 (244)	20 (175)	17 (150)	52 (460)	22 (198)	16 (142)	14 (122)	.36 (3.1)	2.3 (20.0)
	DTR60-100	100:1	27 (237)	19 (171)	16 (146)	49 (435)	22 (193)	16 (138)	13 (119)	.41 (3.5)	2.2 (19.9)
	DTR60-120	120:1	24 (210)	22 (192)	19 (164)	45 (402)	24 (210)	18 (155)	15 (133)	.33 (3.0)	2.3 (20.2)
	DTR60-125	125:1	29 (257)	23 (207)	20 (178)	51 (455)	27 (235)	19 (168)	16 (144)	.32 (2.8)	2.4 (21.5)
	DTR60-150	150:1	30 (268)	22 (193)	19 (165)	50 (445)	22 (198)	18 (156)	15 (134)	.35 (2.9)	2.3 (20.1)
	DTR60-200	200:1	31 (275)	24 (210)	20 (180)	51 (450)	27 (237)	19 (171)	16 (146)	.41 (3.4)	2.3 (20.2)
	DTR60-250	250:1	32 (279)	25 (224)	22 (193)	51 (455)	29 (254)	21 (182)	18 (156)	.32 (2.7)	2.4 (21.5)
	DTR60-300	300:1	23 (202)	20 (175)	18 (162)	49 (430)	21 (186)	18 (162)	17 (150)	.35 (2.8)	1.7 (14.8)
	DTR60-400	400:1	24 (210)	20 (181)	19 (169)	49 (430)	22 (194)	19 (168)	18 (156)	.33 (2.7)	1.7 (14.8)
	DTR60-500	500:1	24 (215)	21 (186)	20 (175)	49 (430)	23 (199)	20 (173)	18 (162)	.30 (2.7)	1.7 (14.8)

[1] Ratios are exact, higher ratios are also available, consult factory.
T_r = Rated output torque at rated speed for specified hours of life.
J = Mass moment of inertia reflected to the input shaft (including pinion assembly).

For ordering information see inside back cover

See page 11 for gearhead selection criteria

THOMSON MICRON™
Leading in Motion Control Technology
☎1-888-55-4-MOTION•FAX 516-467-9814•www.thomsonindustries.com

The specifications and data in this publication are believed to be accurate and reliable. However, it is the responsibility of the product user to determine the suitability of Thomson Micron products for a specific application. While defective products will be replaced without charge if promptly returned, no liability is assumed beyond such replacement. © 1998 Thomson Micron, LLC
*Trademark of Thomson Industries, Inc. THOMSON is registered in the U.S. Patent and Trademark Office and in other countries.

DuraTRUE 90* Size 60S *(Slim Line)*

Right Angle Gearhead Metric

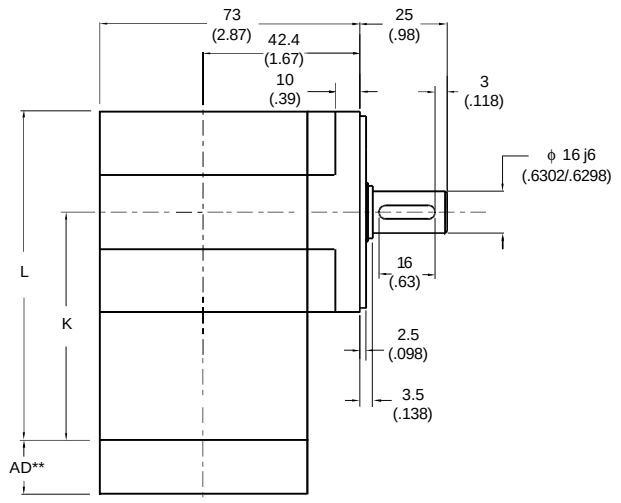

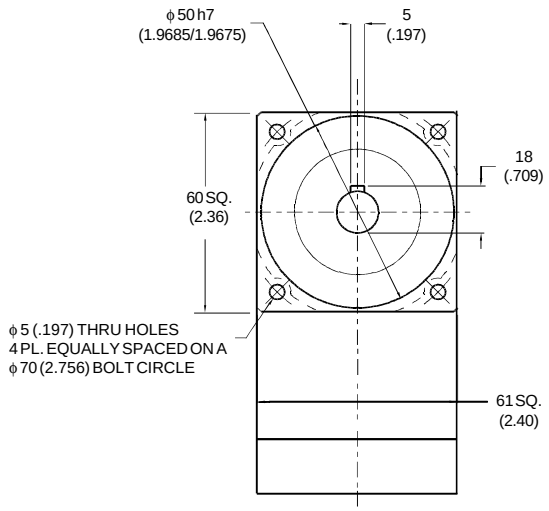

Ratio	Dimension 'K' mm *(in)*	Dimension 'L' mm *(in)*	Backlash (arc-min)	Weight Kg *(lb)*	Efficiency
1:1 to 5:1P	79 *(3.11)*	109.5 *(4.31)*	8 max	2.3 *(5)*	95%
5:1T to 50:1	96 *(3.79)*	127 *(4.99)*	9 max	2.5 *(5.5)*	90%
60:1 to 500:1	114 *(4.48)*	144 *(5.68)*	9 max	2.7 *(6)*	85%

** AD = Adapter length.
Adapter length will vary depending on motor.
Call 1-888-55-4-MOTION for your free Motor Mounting Catalog.

All Dimensions are: mm (inches)

(TABLE 1) PERFORMANCE SPECIFICATIONS

	Part Number	Ratio[1]	5,000 HOUR LIFE T_r (1000 rpm) Nm *(in-lb)*	5,000 HOUR LIFE T_r (3000 rpm) Nm *(in-lb)*	5,000 HOUR LIFE T_r (5000 rpm) Nm *(in-lb)*	T_{peak} Nm *(in-lb)*	10,000 HOUR LIFE T_r (1000 rpm) Nm *(in-lb)*	10,000 HOUR LIFE T_r (3000 rpm) Nm *(in-lb)*	10,000 HOUR LIFE T_r (5000 rpm) Nm *(in-lb)*	J kg-cm² *(in-lb-sec² x10 ⁻⁴)*	Torsional Stiffness Nm/arc-min *(in-lb/arc-min)*
True Planetary and PowerTrue* Technology*	**DTR60S-001**	1:1	7 (66)	7 (60)	6 (54)	25 (217)	7 (61)	6 (56)	6 (50)	.79 (7.0)	1.8 (15.8)
	DTR60S-002	2:1	16 (145)	15 (132)	14 (120)	45 (400)	15 (134)	14 (122)	12 (111)	.41 (3.6)	2.7 (23.8)
	DTR60S-003	3:1	10 (92)	10 (84)	9 (76)	34 (300)	10 (85)	9 (78)	8 (70)	.35 (3.1)	3.0 (26.9)
	DTR60S-004	4:1	8 (68)	7 (62)	6 (56)	30 (264)	7 (63)	6 (57)	6 (52)	.32 (2.9)	3.2 (28.2)
	DTR60S-005P	5:1P	6 (56)	6 (51)	5 (46)	23 (200)	6 (52)	5 (47)	5 (43)	.32 (2.8)	3.3 (28.8)
	DTR60S-005T	5:1T	23 (200)	18 (162)	16 (138)	46 (407)	21 (182)	15 (132)	13 (112)	.42 (3.7)	3.3 (28.8)
	DTR60S-006	6:1	19 (171)	16 (145)	16 (141)	46 (407)	19 (167)	15 (134)	15 (130)	.41 (3.7)	2.1 (18.8)
	DTR60S-009	9:1	12 (109)	10 (92)	10 (90)	36 (321)	12 (106)	10 (85)	9 (83)	.35 (3.1)	2.7 (23.7)
	DTR60S-010	10:1	20 (176)	18 (160)	16 (145)	46 (407)	20 (174)	17 (154)	15 (134)	.39 (3.5)	2.1 (18.5)
	DTR60S-012	12:1	9 (80)	8 (68)	7 (66)	32 (280)	9 (78)	7 (63)	7 (61)	.33 (3.0)	3.0 (26.1)
	DTR60S-015	15:1	13 (112)	12 (102)	10 (92)	37 (330)	12 (110)	11 (98)	10 (85)	.33 (2.9)	3.1 (27.4)
	DTR60S-020	20:1	9 (82)	8 (75)	8 (68)	46 (407)	9 (81)	8 (72)	7 (63)	.31 (2.8)	2.9 (26.0)
	DTR60S-025	25:1	8 (68)	7 (62)	6 (56)	25 (220)	8 (67)	7 (59)	6 (52)	.31 (2.7)	3.1 (27.3)
	DTR60S-030	30:1	13 (114)	12 (109)	12 (105)	38 (339)	13 (114)	12 (107)	11 (101)	.32 (2.8)	2.5 (22.4)
	DTR60S-040	40:1	10 (84)	9 (81)	9 (77)	33 (292)	9 (84)	9 (79)	8 (74)	.30 (2.7)	2.8 (25.2)
	DTR60S-050	50:1	8 (69)	7 (66)	7 (63)	25 (225)	8 (69)	7 (65)	7 (61)	.30 (2.6)	3.0 (26.8)
	DTR60S-060	60:1	21 (182)	20 (180)	20 (177)	46 (407)	21 (182)	20 (178)	20 (175)	.42 (3.7)	2.0 (18.1)
	DTR60S-075	75:1	13 (116)	13 (114)	13 (112)	39 (345)	13 (115)	13 (113)	12 (110)	.33 (3.0)	2.6 (23.4)
	DTR60S-090	90:1	13 (116)	13 (114)	13 (113)	39 (348)	13 (116)	13 (114)	13 (111)	.35 (3.1)	2.6 (23.3)
	DTR60S-100	100:1	21 (183)	20 (181)	20 (180)	46 (407)	21 (182)	20 (180)	20 (178)	.40 (3.5)	2.1 (18.3)
	DTR60S-120	120:1	10 (85)	10 (84)	9 (83)	34 (300)	10 (85)	9 (84)	9 (82)	.33 (3.0)	2.9 (25.8)
	DTR60S-125	125:1	8 (70)	8 (69)	8 (68)	26 (230)	8 (70)	8 (68)	8 (67)	.31 (2.8)	3.1 (27.3)
	DTR60S-150	150:1	13 (116)	13 (115)	13 (114)	40 (351)	13 (116)	13 (115)	13 (114)	.33 (2.9)	2.6 (23.4)
	DTR60S-200	200:1	21 (183)	21 (182)	21 (181)	46 (407)	21 (183)	21 (182)	20 (181)	.39 (3.4)	1.9 (17.0)
	DTR60S-250	250:1	8 (70)	8 (70)	8 (69)	26 (230)	8 (70)	8 (69)	8 (69)	.31 (2.7)	3.1 (27.3)
	DTR60S-300	300:1	13 (116)	13 (116)	13 (115)	40 (354)	13 (116)	13 (116)	13 (115)	.32 (2.8)	2.5 (22.4)
	DTR60S-400	400:1	10 (86)	10 (85)	10 (85)	34 (304)	10 (86)	10 (85)	10 (85)	.31 (2.7)	2.8 (25.2)
	DTR60S-500	500:1	8 (70)	8 (70)	8 (70)	26 (230)	8 (70)	8 (70)	8 (70)	.30 (2.7)	3.0 (26.8)

[1] Ratios are exact, higher ratios are also available, consult factory.
T_r = Rated output torque at rated speed for specified hours of life.
J = Mass moment of inertia reflected to the input shaft (including pinion assembly).

For ordering information see inside back cover

See page 11 for gearhead selection criteria

The specifications and data in this publication are believed to be accurate and reliable. However, it is the responsibility of the product user to determine the suitability of Thomson Micron products for a specific application. While defective products will be replaced without charge if promptly returned, no liability is assumed beyond such replacement. © 1998 Thomson Micron, LLC
* Trademark of Thomson Industries, Inc. THOMSON is registered in the U.S. Patent and Trademark Office and in other countries.

THOMSON MICRON™
Leading in Motion Control Technology
☎ 1-888-55-4-MOTION•FAX 516-467-9814•www.thomsonindustries.com

DuraTRUE 90* Size 90
Right Angle Gearhead Metric

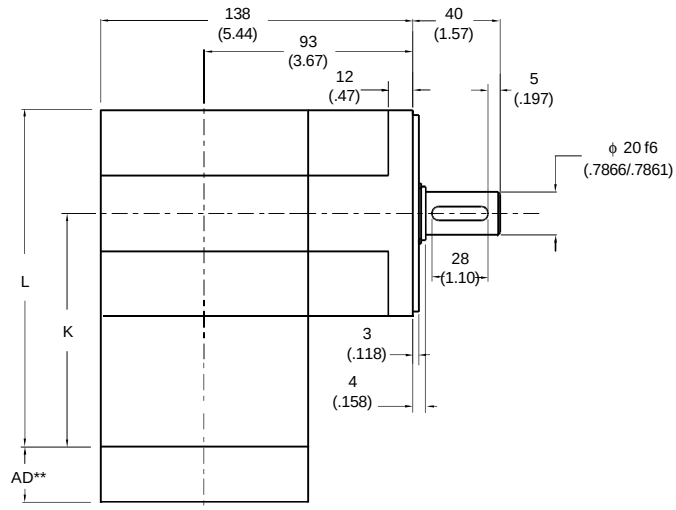

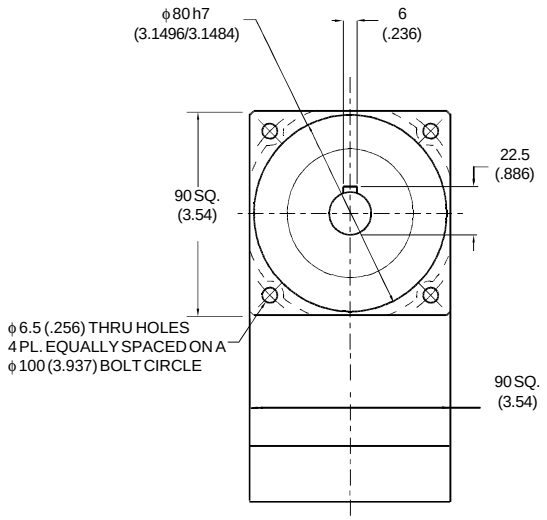

Ratio	Dimension 'K' mm *(in)*	Dimension 'L' mm *(in)*	Backlash (arc-min)	Weight Kg *(lb)*	Efficiency
5:1 to 50:1	101 *(3.99)*	146 *(5.76)*	9 max	4.8 *(10)*	90%
60:1 to 500:1	124 *(4.89)*	169 *(6.66)*	9 max	5.5 *(12)*	85%

** AD = Adapter length.
Adapter length will vary depending on motor.
Call 1-888-55-4-MOTION for your free Motor Mounting Catalog.

All Dimensions are: mm (inches)

(TABLE 1) PERFORMANCE SPECIFICATIONS

	Part Number	Ratio[1]	5,000 HOUR LIFE			T_{peak}	10,000 HOUR LIFE			J kg-cm² *(in-lb-sec² x10 -4)*	Torsional Stiffness Nm/arc-min *(in-lb/arc-min)*
			T_r (1000 rpm) Nm *(in-lb)*	T_r (3000 rpm) Nm *(in-lb)*	T_r (5000 rpm) Nm *(in-lb)*	Nm *(in-lb)*	T_r (1000 rpm) Nm *(in-lb)*	T_r (3000 rpm) Nm *(in-lb)*	T_r (5000 rpm) Nm *(in-lb)*		
True Planetary and PowerTrue* Technology*	**DTR90-005**	5:1	79 (702)	58 (515)	50 (442)	167 (1479)	66 (582)	47 (418)	41 (359)	1.64 (14.5)	7.8 (69.2)
	DTR90-006	6:1	82 (722)	61 (544)	53 (467)	167 (1479)	69 (614)	50 (442)	43 (379)	1.63 (14.4)	5.5 (48.2)
	DTR90-009	9:1	75 (665)	69 (614)	60 (527)	167 (1479)	75 (665)	56 (499)	48 (428)	1.39 (12.3)	5.5 (48.8)
	DTR90-010	10:1	79 (703)	68 (599)	58 (514)	167 (1479)	76 (676)	55 (486)	47 (417)	1.62 (14.3)	5.5 (48.4)
	DTR90-012	12:1	57 (509)	57 (509)	57 (509)	144 (1272)	57 (509)	57 (509)	53 (467)	1.29 (11.4)	5.5 (49.0)
	DTR90-015	15:1	82 (723)	75 (664)	66 (580)	167 (1479)	80 (707)	62 (549)	53 (471)	1.26 (11.1)	5.5 (49.0)
	DTR90-020	20:1	83 (737)	77 (681)	72 (633)	167 (1479)	81 (720)	68 (599)	58 (514)	1.28 (11.3)	5.5 (48.7)
	DTR90-025	25:1	71 (624)	71 (624)	71 (624)	167 (1479)	71 (624)	71 (624)	62 (549)	1.26 (11.1)	5.5 (48.7)
	DTR90-030	30:1	64 (568)	55 (488)	51 (452)	167 (1479)	59 (526)	51 (452)	47 (418)	1.38 (12.2)	4.0 (35.6)
	DTR90-040	40:1	67 (590)	58 (509)	53 (472)	167 (1479)	62 (546)	53 (471)	49 (437)	1.28 (11.3)	4.0 (35.6)
	DTR90-050	50:1	69 (608)	59 (525)	55 (488)	167 (1479)	63 (562)	55 (486)	51 (452)	1.25 (11.1)	4.0 (35.6)
	DTR90-060	60:1	106 (941)	80 (709)	69 (608)	167 (1479)	90 (800)	65 (576)	56 (494)	1.63 (14.4)	5.5 (48.6)
	DTR90-075	75:1	98 (870)	90 (799)	79 (698)	167 (1479)	96 (851)	75 (661)	64 (567)	1.39 (12.3)	5.5 (48.4)
	DTR90-090	90:1	98 (866)	90 (800)	78 (687)	167 (1479)	98 (866)	73 (650)	63 (558)	1.39 (12.3)	5.4 (48.0)
	DTR90-100	100:1	103 (916)	88 (780)	76 (670)	167 (1479)	100 (881)	72 (633)	61 (543)	1.62 (14.3)	5.4 (47.8)
	DTR90-120	120:1	75 (663)	75 (663)	75 (663)	144 (1272)	75 (663)	75 (663)	69 (608)	1.29 (11.4)	5.5 (48.5)
	DTR90-125	125:1	85 (751)	85 (751)	85 (751)	167 (1479)	85 (751)	85 (751)	75 (661)	1.26 (11.1)	5.8 (51.6)
	DTR90-150	150:1	106 (942)	98 (865)	85 (756)	167 (1479)	98 (866)	81 (715)	69 (614)	1.39 (12.3)	5.5 (48.3)
	DTR90-200	200:1	109 (960)	100 (887)	93 (825)	167 (1479)	106 (938)	88 (780)	76 (670)	1.61 (14.2)	5.5 (48.5)
	DTR90-250	250:1	92 (813)	92 (813)	92 (813)	167 (1479)	92 (813)	92 (813)	81 (715)	1.26 (11.1)	5.8 (51.5)
	DTR90-300	300:1	84 (740)	72 (636)	67 (589)	167 (1479)	77 (685)	67 (589)	62 (545)	1.38 (12.2)	4.0 (35.5)
	DTR90-400	400:1	87 (769)	75 (663)	69 (615)	167 (1479)	80 (711)	69 (614)	64 (569)	1.28 (11.3)	4.0 (35.5)
	DTR90-500	500:1	90 (792)	77 (684)	72 (636)	167 (1479)	83 (732)	72 (633)	67 (589)	1.20 (10.6)	4.0 (35.6)

[1] Ratios are exact, higher ratios are also available, consult factory.
T_r = Rated output torque at rated speed for specified hours of life.
J = Mass moment of inertia reflected to the input shaft (including pinion assembly).

For ordering information see inside back cover

See page 11 for gearhead selection criteria

THOMSON MICRON™
Leading in Motion Control Technology
☎1-888-55-4-MOTION•FAX 516-467-9814•www.thomsonindustries.com

The specifications and data in this publication are believed to be accurate and reliable. However, it is the responsibility of the product user to determine the suitability of Thomson Micron products for a specific application. While defective products will be replaced without charge if promptly returned, no liability is assumed beyond such replacement. © 1998 Thomson Micron, LLC
* Trademark of Thomson Industries, Inc. THOMSON is registered in the U.S. Patent and Trademark Office and in other countries.

DuraTRUE 90* Size 90S *(Slim Line)*

Right Angle Gearhead Metric

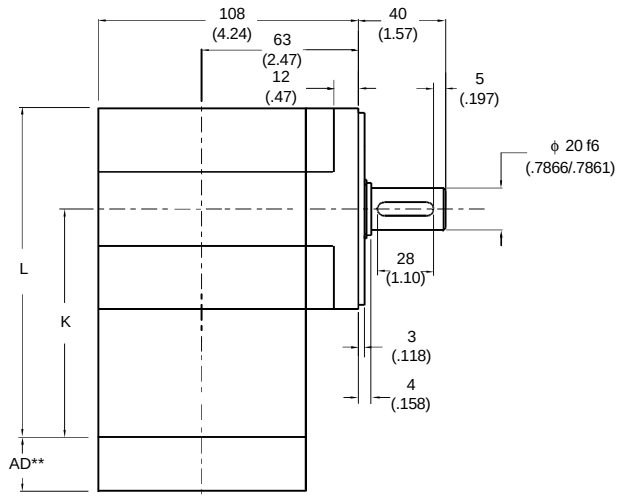

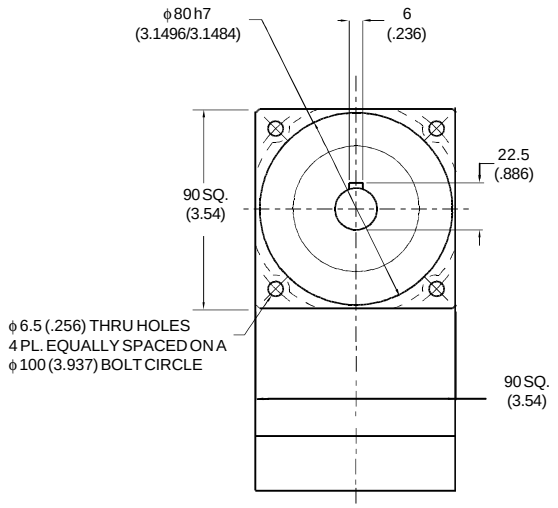

Ratio	Dimension 'K' mm *(in)*	Dimension 'L' mm *(in)*	Backlash (arc-min)	Weight Kg *(lb)*	Efficiency
1:1 to 5:1P	101 *(3.99)*	146 *(5.76)*	8 max	4.1 *(9)*	95%
5:1T to 50:1	124 *(4.89)*	169 *(6.66)*	9 max	4.8 *(10)*	90%
60:1 to 500:1	147 *(5.79)*	192 *(7.56)*	9 max	5.5 *(12)*	85%

** AD = Adapter length.
Adapter length will vary depending on motor.
Call 1-888-55-4-MOTION for your free Motor Mounting Catalog.

All Dimensions are: mm (inches)

(TABLE 1) PERFORMANCE SPECIFICATIONS

	Part Number	Ratio[1]	5,000 HOUR LIFE T_r (1000 rpm) Nm *(in-lb)*	5,000 HOUR LIFE T_r (3000 rpm) Nm *(in-lb)*	5,000 HOUR LIFE T_r (5000 rpm) Nm *(in-lb)*	T_{peak} Nm *(in-lb)*	10,000 HOUR LIFE T_r (1000 rpm) Nm *(in-lb)*	10,000 HOUR LIFE T_r (3000 rpm) Nm *(in-lb)*	10,000 HOUR LIFE T_r (5000 rpm) Nm *(in-lb)*	J kg-cm² *(in-lb-sec² x10 -4)*	Torsional Stiffness Nm/arc-min *(in-lb/arc-min)*
True Planetary and PowerTrue* Technology*	**DTR90S-001**	1:1	21 (188)	19 (171)	17 (155)	62 (548)	20 (173)	18 (158)	16 (143)	3.11 (27.5)	4.3 (37.9)
	DTR90S-002	2:1	48 (426)	44 (389)	40 (352)	140 (1237)	44 (394)	41 (359)	37 (325)	1.59 (14.1)	6.5 (57.2)
	DTR90S-003	3:1	32 (281)	29 (256)	26 (232)	114 (1005)	29 (260)	27 (237)	24 (214)	1.37 (12.1)	7.3 (64.6)
	DTR90S-004	4:1	24 (215)	22 (196)	20 (177)	87 (772)	22 (199)	20 (181)	19 (164)	1.27 (11.2)	7.6 (67.7)
	DTR90S-005P	5:1P	18 (158)	16 (144)	15 (131)	73 (645)	17 (146)	15 (133)	14 (121)	1.25 (11.0)	7.8 (69.2)
	DTR90S-005T	5:1T	64 (568)	55 (483)	53 (469)	140 (1237)	63 (556)	50 (446)	49 (433)	1.64 (14.5)	5.1 (45.1)
	DTR90S-006	6:1	57 (501)	48 (426)	47 (414)	140 (1237)	55 (490)	44 (394)	43 (382)	1.63 (14.4)	5.1 (45.1)
	DTR90S-009	9:1	37 (331)	32 (281)	31 (273)	124 (1095)	37 (323)	29 (260)	28 (252)	1.37 (12.1)	6.4 (56.9)
	DTR90S-010	10:1	58 (516)	53 (471)	48 (426)	140 (1237)	58 (510)	51 (452)	44 (394)	1.54 (13.7)	5.0 (44.5)
	DTR90S-012	12:1	29 (253)	24 (215)	24 (209)	94 (836)	28 (247)	22 (199)	22 (193)	1.31 (11.6)	7.1 (62.7)
	DTR90S-015	15:1	38 (340)	35 (311)	32 (281)	128 (1131)	38 (336)	34 (298)	29 (260)	1.28 (11.3)	7.4 (65.8)
	DTR90S-020	20:1	29 (261)	27 (238)	24 (215)	140 (1237)	29 (257)	26 (228)	22 (199)	1.22 (10.8)	7.1 (62.4)
	DTR90S-025	25:1	22 (192)	20 (175)	18 (158)	80 (705)	21 (189)	19 (168)	17 (146)	1.20 (10.6)	7.4 (65.6)
	DTR90S-030	30:1	39 (348)	38 (333)	36 (318)	131 (1161)	39 (346)	37 (327)	35 (307)	1.25 (11.1)	6.1 (53.8)
	DTR90S-040	40:1	30 (266)	29 (255)	28 (243)	99 (880)	30 (265)	28 (250)	27 (235)	1.19 (10.6)	6.8 (60.5)
	DTR90S-050	50:1	22 (196)	21 (188)	20 (179)	82 (725)	22 (195)	21 (184)	20 (173)	1.17 (10.4)	7.3 (64.2)
	DTR90S-060	60:1	60 (535)	60 (527)	59 (520)	140 (1237)	60 (534)	59 (524)	58 (514)	1.63 (14.4)	4.9 (43.5)
	DTR90S-075	75:1	40 (352)	39 (346)	38 (340)	136 (1200)	40 (351)	39 (344)	38 (336)	1.31 (11.6)	6.4 (56.2)
	DTR90S-090	90:1	40 (353)	39 (348)	39 (343)	136 (1206)	40 (352)	39 (346)	38 (339)	1.37 (12.1)	6.3 (55.8)
	DTR90S-100	100:1	61 (536)	60 (532)	60 (527)	140 (1237)	61 (536)	60 (530)	59 (524)	1.55 (13.7)	5.0 (43.9)
	DTR90S-120	120:1	31 (270)	30 (266)	30 (262)	103 (908)	30 (269)	30 (265)	29 (260)	1.31 (11.6)	7.0 (62.0)
	DTR90S-125	125:1	22 (198)	22 (195)	22 (192)	84 (740)	22 (198)	22 (194)	21 (189)	1.23 (10.8)	7.4 (65.5)
	DTR90S-150	150:1	40 (354)	40 (351)	39 (348)	138 (1218)	40 (353)	39 (350)	39 (346)	1.29 (11.4)	6.3 (56.1)
	DTR90S-200	200:1	61 (538)	60 (535)	60 (533)	140 (1237)	61 (537)	60 (534)	60 (531)	1.52 (13.5)	4.6 (40.7)
	DTR90S-250	250:1	23 (199)	22 (198)	22 (196)	85 (750)	22 (199)	22 (197)	22 (195)	1.21 (10.7)	7.4 (65.4)
	DTR90S-300	300:1	40 (355)	40 (353)	40 (352)	139 (1230)	40 (354)	40 (352)	40 (350)	1.26 (11.1)	6.1 (53.7)
	DTR90S-400	400:1	31 (271)	31 (270)	30 (269)	104 (924)	31 (271)	30 (270)	30 (268)	1.20 (10.6)	6.8 (60.5)
	DTR90S-500	500:1	23 (200)	22 (199)	22 (198)	85 (755)	23 (200)	22 (198)	22 (197)	1.18 (10.4)	7.3 (64.2)

[1] Ratios are exact, higher ratios are also available, consult factory.
T_r = Rated output torque at rated speed for specified hours of life.
J = Mass moment of inertia reflected to the input shaft (including pinion assembly).

For ordering information see inside back cover

See page 11 for gearhead selection criteria

The specifications and data in this publication are believed to be accurate and reliable. However, it is the responsibility of the product user to determine the suitability of Thomson Micron products for a specific application. While defective products will be replaced without charge if promptly returned, no liability is assumed beyond such replacement. © 1998 Thomson Micron, LLC
* Trademark of Thomson Industries, Inc. THOMSON is registered in the U.S. Patent and Trademark Office and in other countries.

DuraTRUE 90* Size 115
Right Angle Gearhead Metric

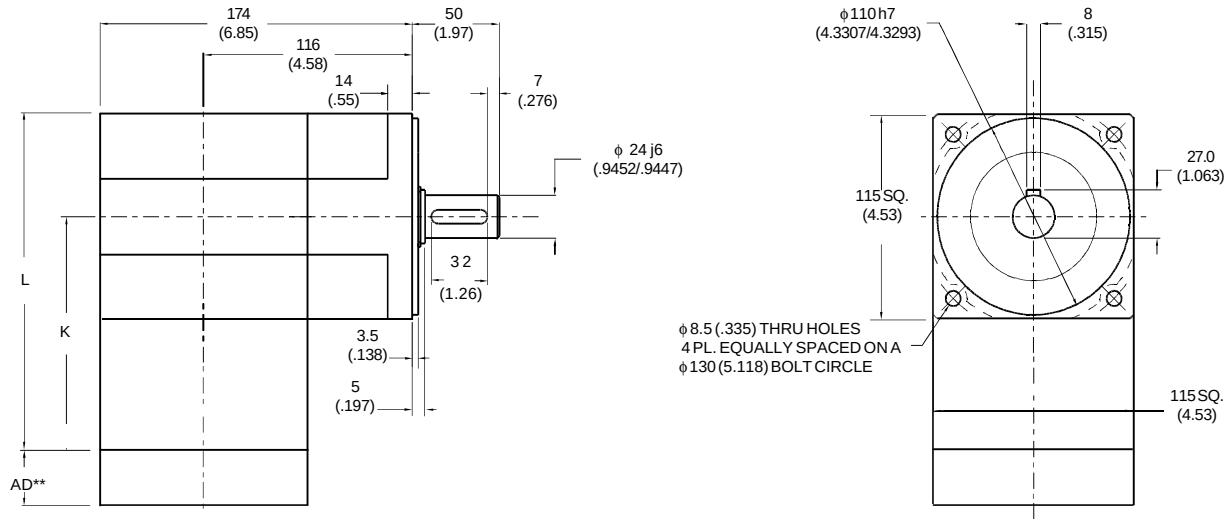

Ratio	Dimension 'K' mm *(in)*	Dimension 'L' mm *(in)*	Backlash (arc-min)	Weight Kg *(lb)*	Efficiency
5:1 to 50:1	137 *(5.40)*	195 *(7.67)*	8 max	11 *(24)*	90%
60:1 to 500:1	168.4 *(6.63)*	226 *(8.90)*	9 max	12 *(27)*	85%

** AD = Adapter length.
Adapter length will vary depending on motor.
Call 1-888-55-4-MOTION for your free Motor Mounting Catalog.

All Dimensions are: mm (inches)

(TABLE 1) PERFORMANCE SPECIFICATIONS

	Part Number	Ratio[1]	5,000 HOUR LIFE T_r (1000 rpm) Nm *(in-lb)*	5,000 HOUR LIFE T_r (3000 rpm) Nm *(in-lb)*	5,000 HOUR LIFE T_r (5000 rpm) Nm *(in-lb)*	T_{peak} Nm *(in-lb)*	10,000 HOUR LIFE T_r (1000 rpm) Nm *(in-lb)*	10,000 HOUR LIFE T_r (3000 rpm) Nm *(in-lb)*	10,000 HOUR LIFE T_r (5000 rpm) Nm *(in-lb)*	J kg-cm² *(in-lb-sec² x10 -4)*	Torsional Stiffness Nm/arc-min *(in-lb/arc-min)*
True Planetary and PowerTrue* Technology*	**DTR115-005**	5:1	123 (1086)	88 (781)	76 (670)	284 (2511)	100 (882)	72 (634)	61 (544)	2.79 (24.7)	15.3 (135)
	DTR115-006	6:1	130 (1147)	93 (825)	80 (708)	284 (2511)	105 (932)	76 (670)	65 (575)	2.77 (24.5)	12.5 (110)
	DTR115-009	9:1	146 (1295)	105 (932)	90 (799)	284 (2511)	119 (1052)	86 (757)	73 (649)	2.37 (21.0)	12.6 (112)
	DTR115-010	10:1	143 (1262)	103 (908)	88 (779)	284 (2511)	116 (1025)	83 (738)	72 (633)	2.75 (24.3)	13.1 (116)
	DTR115-012	12:1	137 (1210)	115 (1016)	98 (871)	284 (2511)	130 (1147)	93 (825)	80 (708)	2.19 (19.4)	12.7 (112)
	DTR115-015	15:1	161 (1425)	116 (1025)	99 (880)	284 (2511)	131 (1158)	94 (833)	81 (715)	2.14 (18.9)	12.7 (112)
	DTR115-020	20:1	164 (1453)	126 (1118)	108 (959)	284 (2511)	143 (1262)	103 (908)	88 (779)	2.18 (19.3)	13.2 (117)
	DTR115-025	25:1	167 (1474)	135 (1195)	116(1025)	284 (2511)	153 (1350)	110 (971)	94 (833)	2.14 (18.9)	13.2 (117)
	DTR115-030	30:1	105 (930)	90 (796)	83 (736)	284 (2511)	97 (861)	83 (737)	77 (681)	2.34 (20.7)	11.5 (102)
	DTR115-040	40:1	109 (967)	94 (831)	87 (770)	284 (2511)	101 (894)	87 (769)	80 (712)	2.17 (19.2)	11.5 (102)
	DTR115-050	50:1	112 (995)	97 (858)	90 (796)	284 (2511)	104 (921)	90 (794)	83 (737)	2.13 (18.8)	11.5 (102)
	DTR115-060	60:1	169 (1495)	121 (1075)	104 (923)	284 (2511)	137 (1214)	99 (873)	85 (749)	2.77 (24.5)	13.2 (117)
	DTR115-075	75:1	194 (1715)	139 (1233)	120(1059)	284 (2511)	139 (1233)	113 (1002)	97 (860)	2.35 (20.8)	13.1 (116)
	DTR115-090	90:1	191 (1687)	137 (1214)	118(1041)	284 (2511)	155 (1371)	111 (986)	96 (846)	2.37 (21.0)	12.5 (110)
	DTR115-100	100:1	186 (1644)	134 (1183)	115(1015)	284 (2511)	151 (1336)	109 (962)	93 (825)	2.75 (24.3)	13.0 (115)
	DTR115-120	120:1	178 (1577)	150 (1324)	128(1135)	284 (2511)	169 (1495)	121 (1075)	104 (923)	2.19 (19.4)	12.6 (111)
	DTR115-125	125:1	200 (1774)	162 (1438)	139(1233)	284 (2511)	184 (1624)	132 (1168)	113 (1002)	2.14 (18.9)	13.2 (117)
	DTR115-150	150:1	210 (1857)	151 (1336)	130(1147)	284 (2511)	170 (1509)	123 (1085)	105 (932)	2.35 (20.8)	13.1 (116)
	DTR115-200	200:1	214 (1893)	165 (1457)	141(1250)	284 (2511)	186 (1644)	134 (1183)	115 (1015)	2.73 (24.2)	13.2 (116)
	DTR115-250	250:1	217 (1921)	176 (1557)	151(1336)	284 (2511)	199 (1759)	143 (1265)	123 (1085)	2.14 (18.9)	13.2 (117)
	DTR115-300	300:1	137 (1212)	117 (1037)	108 (959)	284 (2511)	127 (1122)	109 (960)	100 (887)	2.34 (20.7)	11.5 (102)
	DTR115-400	400:1	142 (1260)	122 (1083)	113(1003)	284 (2511)	132 (1165)	113 (1002)	105 (928)	2.17 (19.2)	11.5 (102)
	DTR115-500	500:1	146 (1296)	126 (1118)	117(1037)	284 (2511)	136 (1200)	117 (1035)	109 (960)	2.03 (18.0)	11.5 (102)

[1] Ratios are exact, higher ratios are also available, consult factory.
T_r = Rated output torque at rated speed for specified hours of life.
J = Mass moment of inertia reflected to the input shaft (including pinion assembly).

For ordering information see inside back cover

See page 11 for gearhead selection criteria

THOMSON MICRON™
Leading in Motion Control Technology
☎1-888-55-4-MOTION•FAX 516-467-9814•www.thomsonindustries.com

The specifications and data in this publication are believed to be accurate and reliable. However, it is the responsibility of the product user to determine the suitability of Thomson Micron products for a specific application. While defective products will be replaced without charge if promptly returned, no liability is assumed beyond such replacement. © 1998 Thomson Micron, LLC
* Trademark of Thomson Industries, Inc. THOMSON is registered in the U.S. Patent and Trademark Office and in other countries.

DuraTRUE 90* Size 115S *(Slim Line)*

Right Angle Gearhead Metric

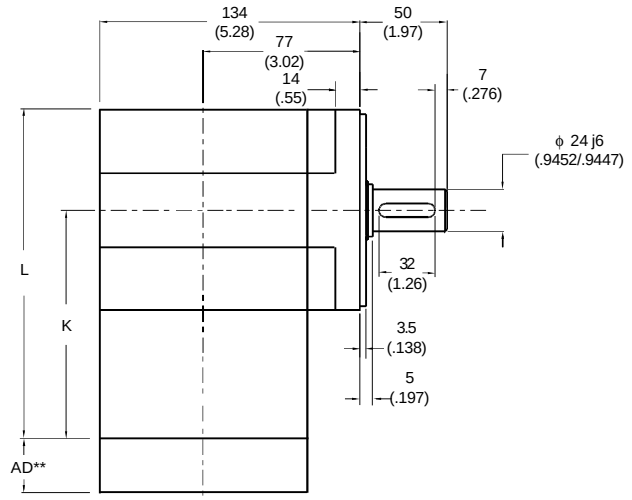

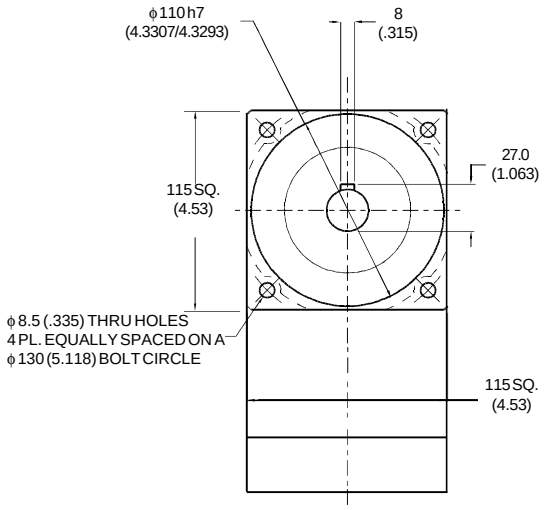

Ratio	Dimension 'K' mm *(in)*	Dimension 'L' mm *(in)*	Backlash (arc-min)	Weight Kg *(lb)*	Efficiency
1:1 to 5:1P	137 *(5.40)*	195 *(7.67)*	8 max	9 *(20)*	95%
5:1T to 50:1	168.4 *(6.63)*	226 *(8.90)*	9 max	11 *(24)*	90%
60:1 to 500:1	200 *(7.87)*	257 *(10.13)*	9 max	12 *(27)*	85%

** AD = Adapter length.
Adapter length will vary depending on motor.
Call 1-888-55-4-MOTION for your free Motor Mounting Catalog.

All Dimensions are: mm (inches)

(TABLE 1) PERFORMANCE SPECIFICATIONS

True Planetary* and PowerTrue* Technology

Part Number	Ratio[1]	5,000 HOUR LIFE T_r (1000 rpm) Nm *(in-lb)*	5,000 HOUR LIFE T_r (3000 rpm) Nm *(in-lb)*	5,000 HOUR LIFE T_r (5000 rpm) Nm *(in-lb)*	T_{peak} Nm *(in-lb)*	10,000 HOUR LIFE T_r (1000 rpm) Nm *(in-lb)*	10,000 HOUR LIFE T_r (3000 rpm) Nm *(in-lb)*	10,000 HOUR LIFE T_r (5000 rpm) Nm *(in-lb)*	J kg-cm² *(in-lb-sec² x10 -4)*	Torsional Stiffness Nm/arc-min *(in-lb/arc-min)*
DTR115S-001	1:1	63 (554)	57 (506)	52 (457)	203 (1800)	58 (512)	53 (467)	48 (422)	5.28 (46.7)	7.6 (67.6)
DTR115S-002	2:1	112 (989)	102 (903)	92 (816)	283 (2505)	103 (913)	94 (834)	85 (754)	2.71 (23.9)	12.5 (111)
DTR115S-003	3:1	87 (768)	79 (701)	72 (634)	256 (2265)	80 (709)	73 (647)	66 (585)	2.33 (20.6)	14.2 (126)
DTR115S-004	4:1	58 (511)	53 (467)	48 (422)	199 (1760)	53 (472)	49 (431)	44 (390)	2.16 (19.1)	14.9 (132)
DTR115S-005P	5:1P	43 (384)	40 (350)	36 (316)	164 (1450)	40 (354)	37 (323)	33 (292)	2.12 (18.8)	15.3 (135)
DTR115S-005T	5:1T	170 (1505)	126 (1117)	108 (958)	283 (2505)	143 (1262)	102 (907)	88 (778)	2.78 (24.6)	15.3 (135)
DTR115S-006	6:1	131 (1163)	112 (989)	109 (960)	283 (2505)	129 (1138)	103 (913)	100 (887)	2.77 (24.5)	10.2 (90.7)
DTR115S-009	9:1	102 (903)	87 (768)	84 (746)	281 (2490)	100 (884)	80 (709)	78 (689)	2.32 (20.5)	12.8 (113)
DTR115S-010	10:1	135 (1198)	124 (1094)	112 (989)	283 (2505)	134 (1183)	118 (1048)	103 (913)	2.63 (23.2)	10.2 (90.3)
DTR115S-012	12:1	68 (601)	58 (511)	56 (496)	217 (1920)	66 (588)	53 (472)	52 (458)	2.22 (19.6)	14.0 (124)
DTR115S-015	15:1	105 (930)	96 (849)	87 (768)	283 (2505)	104 (919)	92 (814)	80 (709)	2.18 (19.3)	14.6 (130)
DTR115S-020	20:1	70 (619)	64 (565)	58 (511)	283 (2505)	69 (612)	61 (542)	53 (472)	2.08 (18.4)	14.0 (124)
DTR115S-025	25:1	52 (465)	48 (424)	43 (384)	183 (1620)	52 (459)	46 (406)	40 (354)	2.04 (18.0)	14.6 (129)
DTR115S-030	30:1	107 (951)	103 (910)	98 (869)	283 (2505)	107 (945)	101 (892)	95 (840)	2.13 (18.9)	12.5 (111)
DTR115S-040	40:1	72 (633)	68 (606)	65 (579)	231 (2040)	71 (629)	67 (594)	63 (559)	2.03 (18.0)	13.8 (122)
DTR115S-050	50:1	54 (475)	51 (454)	49 (434)	188 (1665)	53 (472)	50 (446)	47 (419)	1.99 (17.6)	14.5 (128)
DTR115S-060	60:1	140 (1242)	138 (1224)	136 (1207)	283 (2505)	140 (1239)	137 (1217)	135 (1194)	2.78 (24.6)	10.0 (88.5)
DTR115S-075	75:1	109 (963)	107 (947)	105 (930)	283 (2505)	109 (960)	106 (939)	104 (919)	2.22 (19.7)	12.7 (112)
DTR115S-090	90:1	109 (964)	107 (951)	106 (937)	283 (2505)	109 (962)	107 (945)	105 (927)	2.33 (20.6)	12.6 (112)
DTR115S-100	100:1	141 (1245)	140 (1235)	138 (1224)	283 (2505)	141 (1244)	139 (1230)	137 (1217)	2.64 (23.3)	10.1 (89.5)
DTR115S-120	120:1	73 (642)	72 (633)	70 (624)	238 (2108)	72 (641)	71 (629)	70 (617)	2.23 (19.7)	13.9 (123)
DTR115S-125	125:1	54 (481)	53 (473)	52 (465)	193 (1710)	54 (480)	53 (469)	52 (459)	2.08 (18.4)	14.6 (129)
DTR115S-150	150:1	109 (967)	108 (959)	107 (951)	283 (2505)	109 (966)	108 (955)	107 (945)	2.19 (19.4)	12.7 (112)
DTR115S-200	200:1	141 (1248)	140 (1243)	140 (1237)	283 (2505)	141 (1247)	140 (1240)	139 (1234)	2.59 (22.9)	9.8 (87.1)
DTR115S-250	250:1	55 (483)	54 (479)	54 (475)	196 (1735)	54 (482)	54 (477)	53 (472)	2.05 (18.1)	14.6 (129)
DTR115S-300	300:1	109 (969)	109 (965)	109 (961)	283 (2505)	109 (968)	109 (963)	108 (958)	2.14 (18.9)	12.5 (111)
DTR115S-400	400:1	73 (645)	73 (642)	72 (640)	244 (2160)	73 (645)	72 (641)	72 (638)	2.04 (18.1)	13.8 (122)
DTR115S-500	500:1	55 (484)	54 (482)	54 (480)	198 (1755)	55 (483)	54 (481)	54 (478)	2.00 (17.7)	14.5 (128)

[1] Ratios are exact, higher ratios are also available, consult factory.
T_r = Rated output torque at rated speed for specified hours of life.
J = Mass moment of inertia reflected to the input shaft (including pinion assembly).

For ordering information see inside back cover

See page 11 for gearhead selection criteria

The specifications and data in this publication are believed to be accurate and reliable. However, it is the responsibility of the product user to determine the suitability of Thomson Micron products for a specific application. While defective products will be replaced without charge if promptly returned, no liability is assumed beyond such replacement. © 1998 Thomson Micron, LLC
* Trademark of Thomson Industries, Inc. THOMSON is registered in the U.S. Patent and Trademark Office and in other countries.

THOMSON MICRON™
Leading in Motion Control Technology
☎ 1-888-55-4-MOTION•FAX 516-467-9814•www.thomsonindustries.com

DuraTRUE 90* Size 142
Right Angle Gearhead Metric

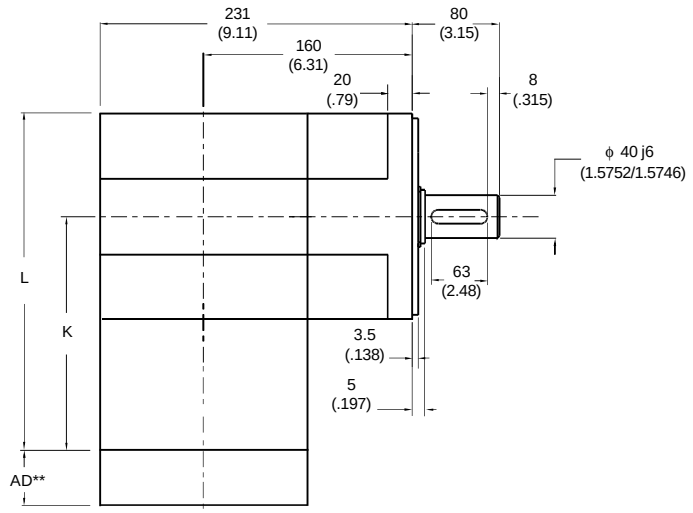

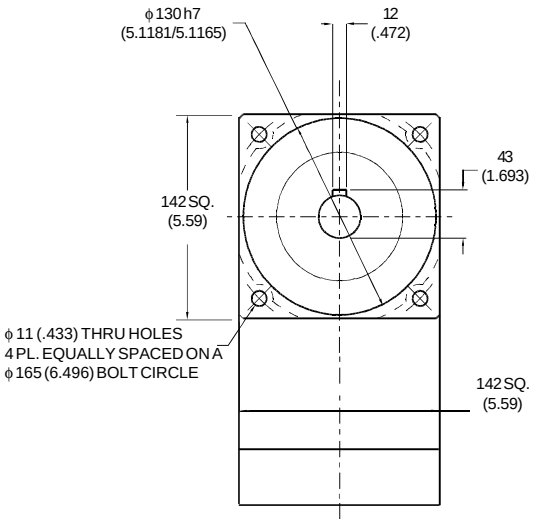

Ratio	Dimension 'K' mm *(in)*	Dimension 'L' mm *(in)*	Backlash (arc-min)	Weight Kg *(lb)*	Efficiency
5:1 to 50:1	160 *(6.29)*	231 *(9.09)*	9 max	24 *(53)*	90%
60:1 to 500:1	209 *(8.23)*	280 *(11.03)*	9 max	28 *(62)*	85%

* AD = Adapter length.
Adapter length will vary depending on motor.
Call 1-888-55-4-MOTION for your free Motor Mounting Catalog.

All Dimensions are: mm (inches)

(TABLE 1) PERFORMANCE SPECIFICATIONS

	Part Number	Ratio[1]	5,000 HOUR LIFE T_r (1000 rpm) Nm *(in-lb)*	5,000 HOUR LIFE T_r (3000 rpm) Nm *(in-lb)*	5,000 HOUR LIFE T_r (5000 rpm) Nm *(in-lb)*	T_{peak} Nm *(in-lb)*	10,000 HOUR LIFE T_r (1000 rpm) Nm *(in-lb)*	10,000 HOUR LIFE T_r (3000 rpm) Nm *(in-lb)*	10,000 HOUR LIFE T_r (5000 rpm) Nm *(in-lb)*	J kg-cm² *(in-lb-sec² x10 -4)*	Torsional Stiffness Nm/arc-min *(in-lb/arc-min)*
True Planetary and PowerTrue* Technology*	**DTR142-005**	5:1	433 (3833)	311 (2757)	267 (2365)	833 (7377)	352 (3114)	253 (2239)	217 (1921)	13.9 (123)	47.4 (419)
	DTR142-006	6:1	454 (4020)	329 (2912)	282 (2498)	833 (7377)	372 (3289)	267 (2365)	229 (2029)	13.8 (122)	38.6 (342)
	DTR142-009	9:1	444 (3934)	372 (3289)	319 (2821)	833 (7377)	420 (3714)	302 (2671)	259 (2292)	11.8 (104)	39.1 (346)
	DTR142-010	10:1	448 (3965)	363 (3210)	311 (2754)	833 (7377)	410 (3625)	295 (2607)	253 (2237)	13.7 (121)	40.6 (360)
	DTR142-012	12:1	319 (2825)	319 (2825)	319 (2825)	798 (7062)	319 (2825)	319 (2825)	282 (2498)	10.9 (96.3)	39.3 (348)
	DTR142-015	15:1	463 (4096)	410 (3625)	351 (3110)	833 (7377)	453 (4005)	333 (2944)	285 (2526)	10.7 (94.2)	39.4 (349)
	DTR142-020	20:1	473 (4183)	432 (3824)	383 (3390)	833 (7377)	462 (4090)	363 (3210)	311 (2754)	10.8 (95.9)	40.9 (362)
	DTR142-025	25:1	399 (3532)	399 (3532)	399 (3532)	833 (7377)	399 (3532)	388 (3432)	333 (2944)	10.6 (94.0)	40.9 (362)
	DTR142-030	30:1	268 (2373)	228 (2022)	134 (1185)	833 (7377)	248 (2196)	211 (1871)	195 (1724)	11.7 (103)	35.6 (315)
	DTR142-040	40:1	279 (2468)	240 (2122)	221 (1952)	833 (7377)	258 (2284)	221 (1955)	204 (1807)	10.8 (95.5)	35.6 (315)
	DTR142-050	50:1	287 (2543)	247 (2183)	228 (2022)	833 (7377)	266 (2353)	228 (2020)	211 (1871)	10.6 (93.7)	35.6 (315)
	DTR142-060	60:1	592 (5238)	429 (3794)	368 (3255)	833 (7377)	486 (4297)	348 (3082)	299 (2644)	13.8 (122)	40.8 (361)
	DTR142-075	75:1	557 (4928)	493 (4362)	423 (3742)	833 (7377)	544 (4819)	400 (3542)	343 (3039)	11.7 (104)	40.6 (360)
	DTR142-090	90:1	579 (5126)	484 (4286)	415 (3676)	833 (7377)	547 (4839)	393 (3480)	337 (2986)	11.8 (104)	38.6 (342)
	DTR142-100	100:1	584 (5166)	473 (4183)	405 (3588)	833 (7377)	534 (4723)	384 (3397)	329 (2915)	13.7 (121)	40.2 (356)
	DTR142-120	120:1	416 (3681)	416 (3681)	416 (3681)	798 (7062)	416 (3681)	416 (3681)	368 (3255)	10.9 (96.3)	39.0 (345)
	DTR142-125	125:1	480 (4250)	480 (4250)	480 (4250)	833 (7377)	480 (4250)	467 (4129)	400 (3542)	10.6 (94.0)	40.9 (362)
	DTR142-150	150:1	603 (5337)	534 (4723)	458 (4052)	833 (7377)	590 (5218)	433 (3836)	372 (3291)	11.7 (104)	40.6 (360)
	DTR142-200	200:1	616 (5450)	563 (4983)	499 (4417)	833 (7377)	602 (5329)	473 (4183)	405 (3588)	13.6 (120)	40.8 (361)
	DTR142-250	250:1	520 (4602)	520 (4602)	520 (4602)	833 (7377)	520 (4602)	505 (4472)	433 (3836)	10.6 (94.0)	40.9 (362)
	DTR142-300	300:1	349 (3092)	298 (2635)	174 (1544)	833 (7377)	323 (2861)	275 (2438)	254 (2246)	11.7 (103)	35.6 (315)
	DTR142-400	400:1	363 (3216)	312 (2765)	287 (2543)	833 (7377)	336 (2976)	288 (2547)	266 (2355)	10.8 (95.5)	35.6 (315)
	DTR142-500	500:1	374 (3314)	321 (2844)	298 (2635)	833 (7377)	346 (3066)	297 (2632)	275 (2438)	10.1 (89.4)	35.6 (315)

[1] Ratios are exact, higher ratios are also available, consult factory.
T_r = Rated output torque at rated speed for specified hours of life.
J = Mass moment of inertia reflected to the input shaft (including pinion assembly).

For ordering information see inside back cover

See page 11 for gearhead selection criteria

THOMSON MICRON™
Leading in Motion Control Technology
☎1-888-55-4-MOTION•FAX 516-467-9814•www.thomsonindustries.com

The specifications and data in this publication are believed to be accurate and reliable. However, it is the responsibility of the product user to determine the suitability of Thomson Micron products for a specific application. While defective products will be replaced without charge if promptly returned, no liability is assumed beyond such replacement. © 1998 Thomson Micron, LLC
* Trademark of Thomson Industries, Inc. THOMSON is registered in the U.S. Patent and Trademark Office and in other countries.

DuraTRUE 90* Size 142S *(Slim Line)*

Right Angle Gearhead Metric

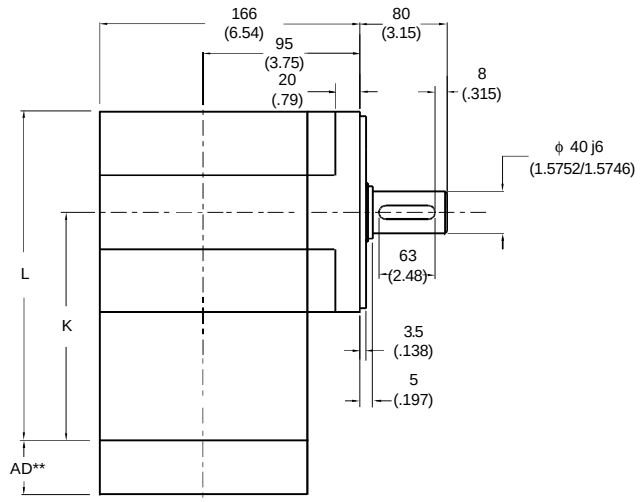

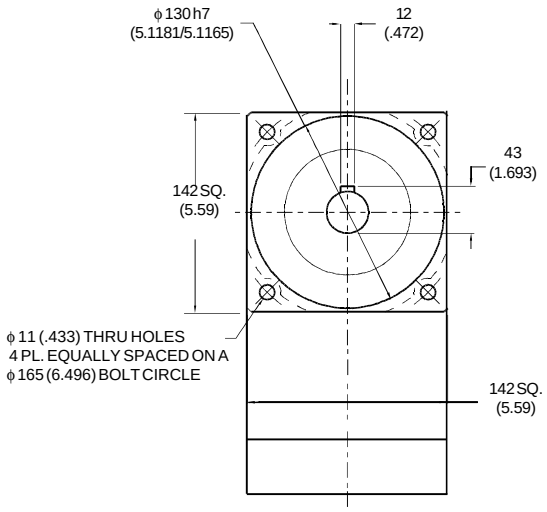

Ratio	Dimension 'K' mm *(in)*	Dimension 'L' mm *(in)*	Backlash (arc-min)	Weight Kg *(lb)*	Efficiency
1:1 to 5:1P	160 *(6.29)*	231 *(9.09)*	8 max	19 *(43)*	95%
5:1T to 50:1	209 *(8.23)*	280 *(11.03)*	9 max	24 *(53)*	90%
60:1 to 500:1	259 *(10.18)*	329 *(12.97)*	9 max	28 *(62)*	85%

** AD = Adapter length.
Adapter length will vary depending on motor.
Call 1-888-55-4-MOTION for your free Motor Mounting Catalog.

All Dimensions are: mm (inches)

(TABLE 1) PERFORMANCE SPECIFICATIONS

	Part Number	Ratio[1]	5,000 HOUR LIFE T_r (1000 rpm) Nm *(in-lb)*	5,000 HOUR LIFE T_r (3000 rpm) Nm *(in-lb)*	5,000 HOUR LIFE T_r (5000 rpm) Nm *(in-lb)*	T_{peak} Nm *(in-lb)*	10,000 HOUR LIFE T_r (1000 rpm) Nm *(in-lb)*	10,000 HOUR LIFE T_r (3000 rpm) Nm *(in-lb)*	10,000 HOUR LIFE T_r (5000 rpm) Nm *(in-lb)*	J kg-cm² *(in-lb-sec² x10 -4)*	Torsional Stiffness Nm/arc-min *(in-lb/arc-min)*
True Planetary and PowerTrue* Technology*	**DTR142S-001**	1:1	135 (1194)	123 (1090)	111 (985)	333 (2950)	125 (1103)	114 (1006)	103 (910)	26.3 (232)	23.7 (210)
	DTR142S-002	2:1	279 (2474)	255 (2257)	231 (2041)	621 (5500)	258 (2284)	236 (2084)	213 (1885)	13.5 (119)	38.9 (344)
	DTR142S-003	3:1	188 (1663)	171 (1518)	155 (1372)	478 (4230)	174 (1536)	158 (1401)	143 (1267)	11.6 (102)	44.1 (390)
	DTR142S-004	4:1	135 (1194)	123 (1090)	111 (985)	414 (3660)	125 (1103)	114 (1006)	103 (910)	10.8 (95.1)	46.3 (410)
	DTR142S-005P	5:1P	101 (896)	92 (818)	84 (739)	347 (3075)	93 (827)	85 (755)	77 (683)	10.6 (93.3)	47.4 (419)
	DTR142S-005T	5:1T	340 (3009)	289 (2559)	281 (2484)	782 (6917)	333 (2944)	267 (2363)	259 (2294)	13.8 (122)	47.4 (419)
	DTR142S-006	6:1	329 (2909)	279 (2474)	271 (2402)	678 (6000)	322 (2846)	258 (2284)	251 (2218)	13.8 (122)	31.8 (281)
	DTR142S-009	9:1	221 (1956)	188 (1663)	182 (1614)	532 (4710)	216 (1913)	174 (1536)	168 (1491)	11.6 (102)	39.6 (351)
	DTR142S-010	10:1	339 (2996)	309 (2735)	279 (2474)	734 (6500)	334 (2958)	296 (2621)	258 (2284)	13.1 (116)	31.6 (280)
	DTR142S-012	12:1	159 (1404)	135 (1194)	131 (1159)	454 (4020)	155 (1374)	125 (1103)	121 (1071)	11.1 (97.7)	43.4 (384)
	DTR142S-015	15:1	228 (2014)	208 (1839)	188 (1663)	551 (4875)	225 (1989)	199 (1762)	174 (1536)	10.9 (95.9)	45.4 (402)
	DTR142S-020	20:1	163 (1446)	149 (1320)	135 (1194)	768 (6800)	161 (1428)	143 (1265)	125 (1103)	10.4 (91.5)	43.3 (383)
	DTR142S-025	25:1	123 (1085)	112 (991)	101 (896)	391 (3460)	121 (1071)	107 (949)	93 (827)	10.2 (89.8)	45.3 (401)
	DTR142S-030	30:1	233 (2058)	223 (1970)	213 (1882)	573 (5070)	231 (2045)	218 (1932)	205 (1819)	10.6 (93.8)	38.8 (343)
	DTR142S-040	40:1	167 (1478)	160 (1415)	153 (1352)	486 (4300)	166 (1469)	157 (1387)	148 (1306)	10.1 (89.4)	42.8 (379)
	DTR142S-050	50:1	125 (1109)	120 (1061)	115 (1014)	404 (3575)	125 (1102)	118 (1041)	111 (980)	9.91 (87.6)	45.0 (398)
	DTR142S-060	60:1	351 (3105)	346 (3061)	341 (3018)	814 (7200)	350 (3099)	344 (3042)	337 (2986)	13.8 (122)	31.0 (274)
	DTR142S-075	75:1	236 (2084)	232 (2049)	228 (2014)	593 (5250)	235 (2079)	230 (2034)	225 (1989)	11.1 (97.9)	39.4 (348)
	DTR142S-090	90:1	236 (2087)	233 (2058)	229 (2029)	597 (5280)	235 (2083)	231 (2045)	227 (2008)	11.6 (103)	39.1 (346)
	DTR142S-100	100:1	352 (3114)	349 (3088)	346 (3061)	825 (7300)	351 (3110)	348 (3076)	344 (3042)	13.1 (116)	31.3 (278)
	DTR142S-120	120:1	169 (1499)	167 (1478)	165 (1457)	506 (4480)	169 (1496)	166 (1469)	163 (1442)	11.1 (98.2)	43.0 (380)
	DTR142S-125	125:1	127 (1123)	125 (1104)	123 (1085)	415 (3675)	127 (1120)	124 (1096)	121 (1071)	10.4 (91.7)	45.3 (401)
	DTR142S-150	150:1	237 (2093)	235 (2076)	233 (2058)	607 (5370)	236 (2091)	234 (2068)	231 (2045)	10.9 (96.4)	39.3 (348)
	DTR142S-200	200:1	353 (3120)	351 (3107)	350 (3094)	842 (7450)	352 (3118)	350 (3101)	349 (3085)	12.9 (114)	30.5 (270)
	DTR142S-250	250:1	127 (1128)	126 (1118)	125 (1109)	421 (3725)	127 (1126)	126 (1114)	125 (1102)	10.2 (90.3)	45.2 (400)
	DTR142S-300	300:1	237 (2098)	236 (2089)	235 (2080)	614 (5430)	237 (2096)	236 (2085)	234 (2074)	10.7 (94.3)	38.8 (343)
	DTR142S-400	400:1	170 (1506)	169 (1500)	169 (1494)	518 (4580)	170 (1505)	169 (1497)	168 (1489)	10.2 (89.8)	42.8 (379)
	DTR142S-500	500:1	128 (1130)	127 (1125)	127 (1121)	427 (3775)	128 (1129)	127 (1123)	126 (1117)	9.96 (88.1)	45.0 (398)

[1] Ratios are exact, higher ratios are also available, consult factory.
T_r = Rated output torque at rated speed for specified hours of life.
J = Mass moment of inertia reflected to the input shaft (including pinion assembly).

For ordering information see inside back cover

See page 11 for gearhead selection criteria

The specifications and data in this publication are believed to be accurate and reliable. However, it is the responsibility of the product user to determine the suitability of Thomson Micron products for a specific application. While defective products will be replaced without charge if promptly returned, no liability is assumed beyond such replacement. © 1998 Thomson Micron, LLC
* Trademark of Thomson Industries, Inc. THOMSON is registered in the U.S. Patent and Trademark Office and in other countries.

RADIAL AND AXIAL LOAD RATINGS (Table 2)

These graphs display the allowable radial load at a given distance (X) from the mounting surface based on an L_{10} life of 10,000 hours for the mean output speed, n_{mout}, as described on page 11.

DTR60 Radial Load Ratings

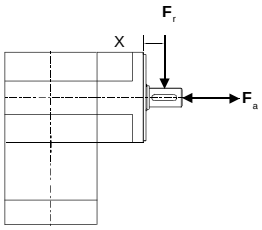

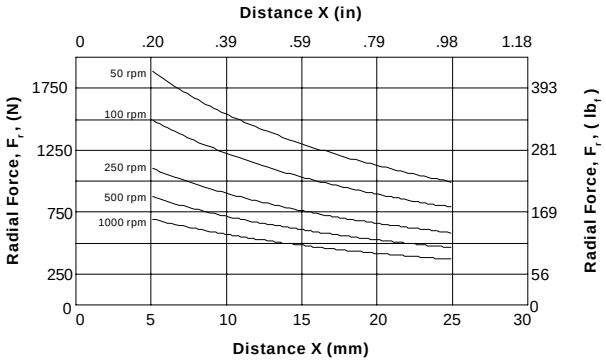

DTR60 Axial Load Ratings

Speed (rpm)	Axial Load, F_a N (lb_f)	
50	3075	*(692)*
100	2441	*(549)*
250	1798	*(405)*
500	1427	*(321)*
1000	1133	*(255)*

DTR90 Radial Load Ratings

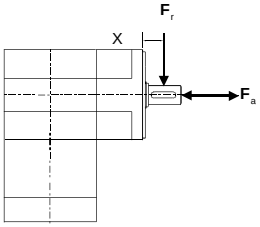

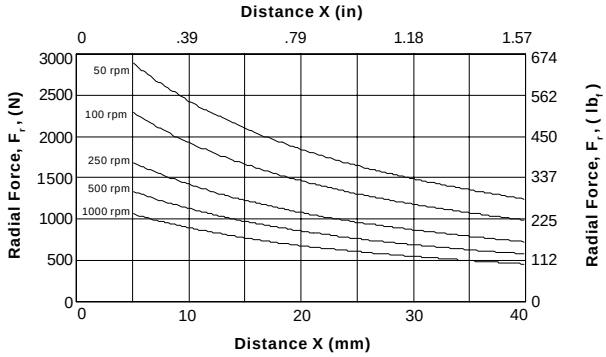

DTR90 Axial Load Ratings

Speed (rpm)	Axial Load, F_a N (lb_f)	
50	4506	*(1014)*
100	3576	*(805)*
250	2635	*(593)*
500	2091	*(471)*
1000	1660	*(373)*

DTR115 Radial Load Ratings

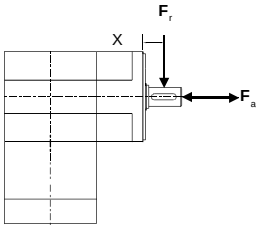

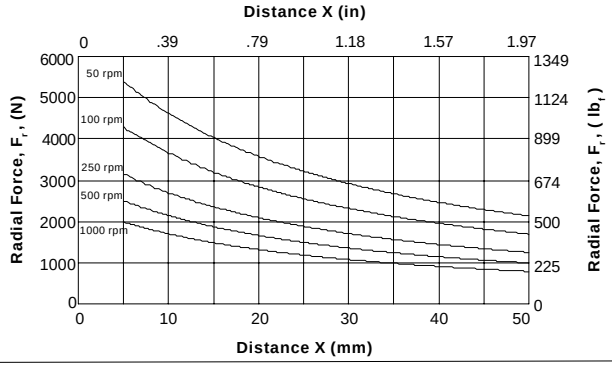

DTR115 Axial Load Ratings

Speed (rpm)	Axial Load, F_a N (lb_f)	
50	8196	*(1844)*
100	6505	*(1464)*
250	4793	*(1078)*
500	3804	*(856)*
1000	3019	*(679)*

DTR142 Radial Load Ratings

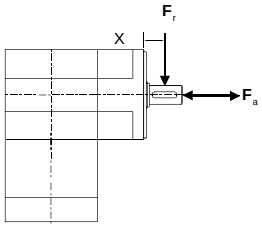

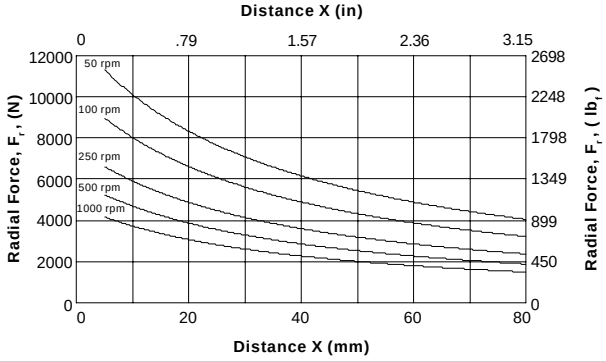

DTR142 Axial Load Ratings

Speed (rpm)	Axial Load, F_a N (lb_f)	
50	17,023	*(3830)*
100	13,511	*(3040)*
250	9956	*(2240)*
500	7902	*(1778)*
1000	6271	*(1411)*

THOMSON MICRON™
Leading in Motion Control Technology
☎1-888-55-4-MOTION•FAX 516-467-9814•www.thomsonindustries.com

The specifications and data in this publication are believed to be accurate and reliable. However, it is the responsibility of the product user to determine the suitability of Thomson Micron products for a specific application. While defective products will be replaced without charge if promptly returned, no liability is assumed beyond such replacement. © 1998 Thomson Micron, LLC
* Trademark of Thomson Industries, Inc. THOMSON is registered in the U.S. Patent and Trademark Office and in other countries.

RADIAL AND AXIAL LOAD RATINGS (Table 2)

These graphs display the allowable radial load at a given distance (X) from the mounting surface based on an L_{10} life of 10,000 hours for the mean output speed, n_{mout}, as described on page 11.

DTR60S Radial Load Ratings

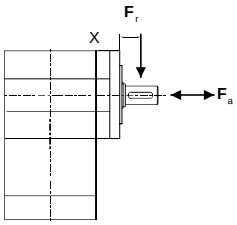

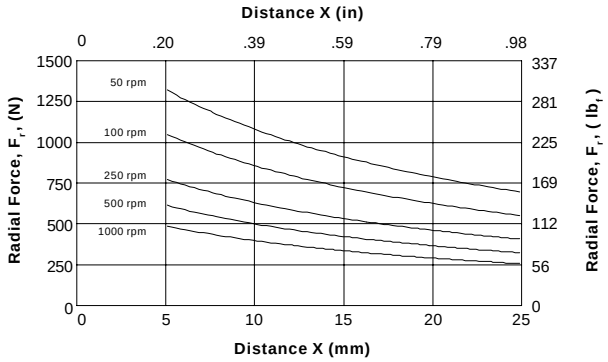

DTR60S Axial Load Ratings

Speed (rpm)	Axial Load, F_a N (lb_f)	
50	2155	*(484)*
100	1710	*(384)*
250	1260	*(283)*
500	1000	*(225)*
1000	794	*(178)*

DTR90S Radial Load Ratings

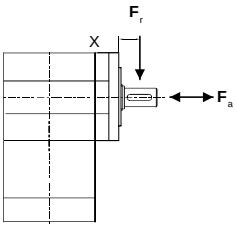

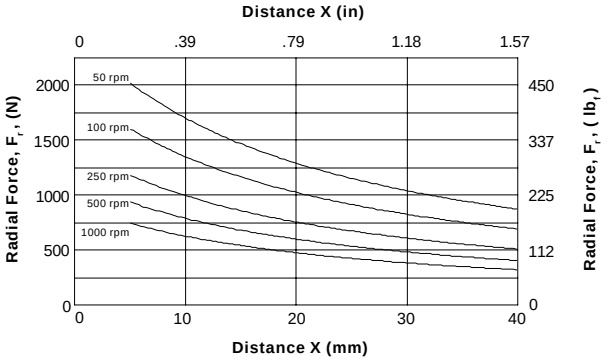

DTR90S Axial Load Ratings

Speed (rpm)	Axial Load, F_a N (lb_f)	
50	3157	(710)
100	2506	(563)
250	1846	(415)
500	1465	(329)
1000	1163	(261)

DTR115S Radial Load Ratings

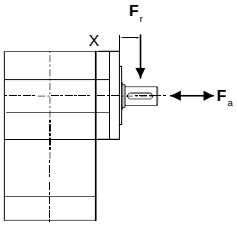

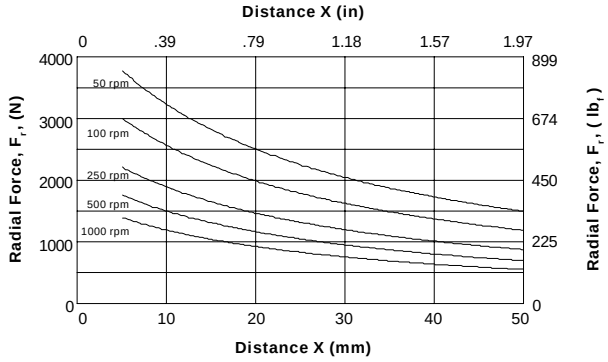

DTR115S Axial Load Ratings

Speed (rpm)	Axial Load, F_a N (lb_f)	
50	5742	(1291)
100	4558	(1025)
250	3358	(755)
500	2665	(599)
1000	2115	(476)

DTR142S Radial Load Ratings

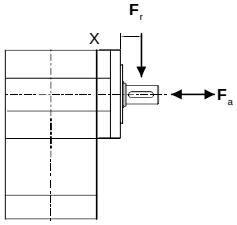

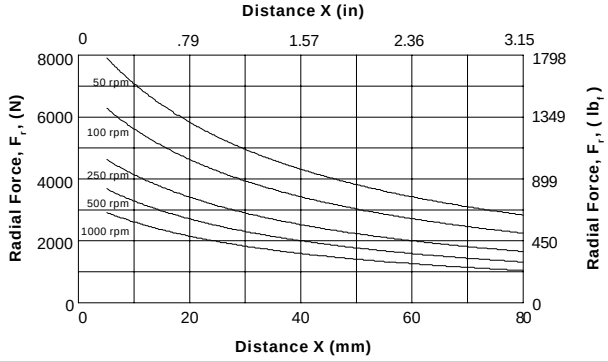

DTR142S Axial Load Ratings

Speed (rpm)	Axial Load, F_a N (lb_f)	
50	11,925	(2681)
100	9465	(2128)
250	6974	(1568)
500	5535	(1244)
1000	4393	(988)

The specifications and data in this publication are believed to be accurate and reliable. However, it is the responsibility of the product user to determine the suitability of Thomson Micron products for a specific application. While defective products will be replaced without charge if promptly returned, no liability is assumed beyond such replacement. © 1998 Thomson Micron, LLC
* Trademark of Thomson Industries, Inc. THOMSON is registered in the U.S. Patent and Trademark Office and in other countries.

Notes:

THOMSON MICRON™
Leading in Motion Control Technology
☎1-888-55-4-MOTION•FAX 516-467-9814•www.thomsonindustries.com

The specifications and data in this publication are believed to be accurate and reliable. However, it is the responsibility of the product user to determine the suitability of Thomson Micron products for a specific application. While defective products will be replaced without charge if promptly returned, no liability is assumed beyond such replacement. © 1998 Thomson Micron, LLC
* Trademark of Thomson Industries, Inc. THOMSON is registered in the U.S. Patent and Trademark Office and in other countries.

DuraTRUE 90* *(HOLLOW SHAFT)*
Right Angle Gearheads

Precision: 8 arc-minutes
Frame Sizes: 90, 115, 142
Torque Capacity: up to 7659 in-lb

Ratio Availability: 1:1 thru 500:1
Radial load capacity: up to 2500 lb
RediMount* motor mounting system

Index Page

DuraTRUE 90 Size 90 Planetary Gearhead.....DTR2
DuraTRUE 90 Size 115 Planetary Gearhead.....DTR3
DuraTRUE 90 Size 142 Planetary Gearhead.....DTR4
Selection.....11
Mounting Tools.....80
Ordering.....Inside Back Cover
Free motor mounting book.....Call 1-888-55-4-Motion

* Trademark of Thomson Industries, Inc. THOMSON is registered in the U.S. Patent Office and in other countries.
© 1997 Thomson Micron, LLC

THOMSON MICRON
Leading in Motion Control Technology
(516) 467-8000 • FAX (516) 467-9814 • www.thomsonind.com

DuraTRUE 90* Size 90H *(HOLLOW SHAFT)*
Right Angle Gearhead Metric

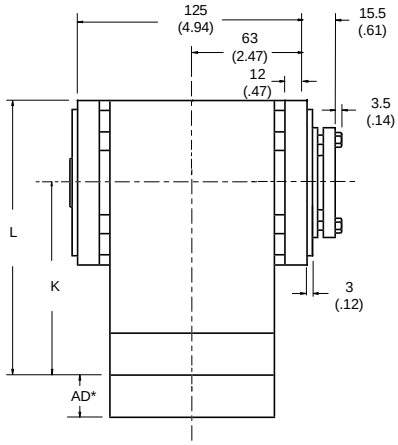

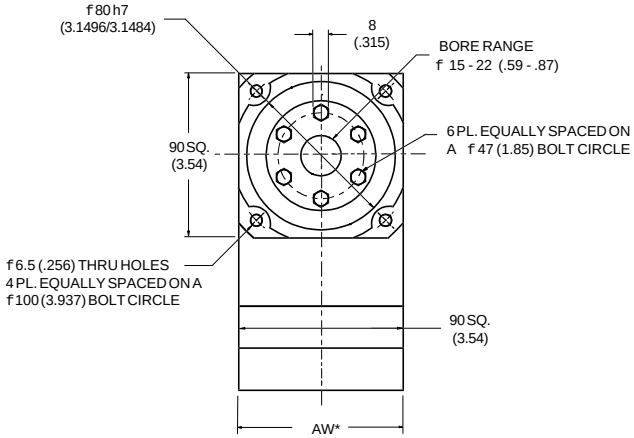

Ratio	Dimension 'K' mm *(in)*	Dimension 'L' mm *(in)*	Backlash (arc-min)	Weight Kg *(lb)*	Efficiency
1:1 to 5:1P	101 *(3.99)*	146 *(5.76)*	8 max	4.1 *(9)*	95%
5:1T to 50:1	124 *(4.89)*	169 *(6.66)*	9 max	4.8 *(10)*	90%
60:1 to 500:1	147 *(5.79)*	192 *(7.56)*	9 max	5.5 *(12)*	85%

* AD = Adapter length.
* AW = Adapter width.
Adapter length and width will vary depending on motor.
Consult Factory for details.

All Dimensions are: mm (inches)

High Precision

(TABLE 1) PERFORMANCE SPECIFICATIONS

	Part Number	Ratio[1]	5,000 HOUR LIFE T_r (1000 rpm) Nm *(in-lb)*	5,000 HOUR LIFE T_r (3000 rpm) Nm *(in-lb)*	5,000 HOUR LIFE T_r (5000 rpm) Nm *(in-lb)*	T_{peak} Nm *(in-lb)*	10,000 HOUR LIFE T_r (1000 rpm) Nm *(in-lb)*	10,000 HOUR LIFE T_r (3000 rpm) Nm *(in-lb)*	10,000 HOUR LIFE T_r (5000 rpm) Nm *(in-lb)*	J kg-cm² *(in-lb-sec² x10⁻⁴)*	Torsional Stiffness Nm/arc-min *(in-lb/arc-min)*
True Planetary and PowerTrue* Technology*	**DTR90H-001**	1:1	21 (188)	19 (171)	17 (155)	140 (1237)	20 (173)	18 (158)	16 (143)	3.11 (27.5)	4.3 (37.9)
	DTR90H-002	2:1	48 (426)	44 (389)	40 (352)	140 (1237)	44 (394)	41 (359)	37 (325)	1.59 (14.1)	6.5 (57.2)
	DTR90H-003	3:1	32 (281)	29 (256)	26 (232)	140 (1237)	29 (260)	27 (237)	24 (214)	1.37 (12.1)	7.3 (64.6)
	DTR90H-004	4:1	24 (215)	22 (196)	20 (177)	140 (1237)	22 (199)	20 (181)	19 (164)	1.27 (11.2)	7.6 (67.7)
	DTR90H-005P	5:1P	18 (158)	16 (144)	15 (131)	140 (1237)	17 (146)	15 (133)	14 (121)	1.25 (11.0)	7.8 (69.2)
	DTR90H-005T	5:1T	64 (568)	55 (483)	53 (469)	140 (1237)	63 (556)	50 (446)	49 (433)	1.64 (14.5)	5.1 (45.1)
	DTR90H-006	6:1	57 (501)	48 (426)	47 (414)	140 (1237)	55 (490)	44 (394)	43 (382)	1.63 (14.4)	5.1 (45.1)
	DTR90H-009	9:1	37 (331)	32 (281)	31 (273)	140 (1237)	37 (323)	29 (260)	28 (252)	1.37 (12.1)	6.4 (56.9)
	DTR90H-010	10:1	58 (516)	53 (471)	48 (426)	140 (1237)	58 (510)	51 (452)	44 (394)	1.54 (13.7)	5.0 (44.5)
	DTR90H-012	12:1	29 (253)	24 (215)	24 (209)	140 (1237)	28 (247)	22 (199)	22 (193)	1.31 (11.6)	7.1 (62.7)
	DTR90H-015	15:1	38 (340)	35 (311)	32 (281)	140 (1237)	38 (336)	34 (298)	29 (260)	1.28 (11.3)	7.4 (65.8)
	DTR90H-020	20:1	29 (261)	27 (238)	24 (215)	140 (1237)	29 (257)	26 (228)	22 (199)	1.22 (10.8)	7.1 (62.4)
	DTR90H-025	25:1	22 (192)	20 (175)	18 (158)	140 (1237)	21 (189)	19 (168)	17 (146)	1.20 (10.6)	7.4 (65.6)
	DTR90H-030	30:1	39 (348)	38 (333)	36 (318)	140 (1237)	39 (346)	37 (327)	35 (307)	1.25 (11.1)	6.1 (53.8)
	DTR90H-040	40:1	30 (266)	29 (255)	28 (243)	140 (1237)	30 (265)	28 (250)	27 (235)	1.19 (10.6)	6.8 (60.5)
	DTR90H-050	50:1	22 (196)	21 (188)	20 (179)	140 (1237)	22 (195)	21 (184)	20 (173)	1.17 (10.4)	7.3 (64.2)
	DTR90H-060	60:1	60 (535)	60 (527)	59 (520)	140 (1237)	60 (534)	59 (524)	58 (514)	1.63 (14.4)	4.9 (43.5)
	DTR90H-075	75:1	40 (352)	39 (346)	38 (340)	140 (1237)	40 (351)	39 (344)	38 (336)	1.31 (11.6)	6.4 (56.2)
	DTR90H-090	90:1	40 (353)	39 (348)	39 (343)	140 (1237)	40 (352)	39 (346)	38 (339)	1.37 (12.1)	6.3 (55.8)
	DTR90H-100	100:1	61 (536)	60 (532)	60 (527)	140 (1237)	61 (536)	60 (530)	59 (524)	1.55 (13.7)	5.0 (43.9)
	DTR90H-120	120:1	31 (270)	30 (266)	30 (262)	140 (1237)	30 (269)	30 (265)	29 (260)	1.31 (11.6)	7.0 (62.0)
	DTR90H-125	125:1	22 (198)	22 (195)	22 (192)	140 (1237)	22 (198)	22 (194)	21 (189)	1.23 (10.8)	7.4 (65.5)
	DTR90H-150	150:1	40 (354)	40 (351)	39 (348)	140 (1237)	40 (353)	39 (350)	39 (346)	1.29 (11.4)	6.3 (56.1)
	DTR90H-200	200:1	61 (538)	60 (535)	60 (533)	140 (1237)	61 (537)	60 (534)	60 (531)	1.52 (13.5)	4.6 (40.7)
	DTR90H-250	250:1	23 (199)	22 (198)	22 (196)	140 (1237)	22 (199)	22 (197)	22 (195)	1.21 (10.7)	7.4 (65.4)
	DTR90H-300	300:1	40 (355)	40 (353)	40 (352)	140 (1237)	40 (354)	40 (352)	40 (350)	1.26 (11.1)	6.1 (53.7)
	DTR90H-400	400:1	31 (271)	31 (270)	30 (269)	140 (1237)	31 (271)	30 (270)	30 (268)	1.20 (10.6)	6.8 (60.5)
	DTR90S-500	500:1	23 (200)	22 (199)	22 (198)	140 (1237)	23 (200)	22 (198)	22 (197)	1.18 (10.4)	7.3 (64.2)

[1] Ratios are exact, higher ratios are also available, consult factory.
T_{peak} = Allowable momentary peak torque for emergency stop or heavy shock loading.
J = Mass moment of inertia reflected back to the input.

For ordering information see page DTR13
For radial and axial loads see page DTR11

THOMSON MICRON
Leading in Motion Control Technology
(516) 467-8000 • FAX (516) 467-9814 • www.thomsonind.com

The specifications and data in this publication are believed to be accurate and reliable. However, it is the responsibility of the product user to determine the suitability of Thomson Micron products for a specific application. While defective products will be replaced without charge if promptly returned, no liability is assumed beyond such replacement.

DuraTRUE 90* Size 115H *(HOLLOW SHAFT)*
Right Angle Gearhead Metric

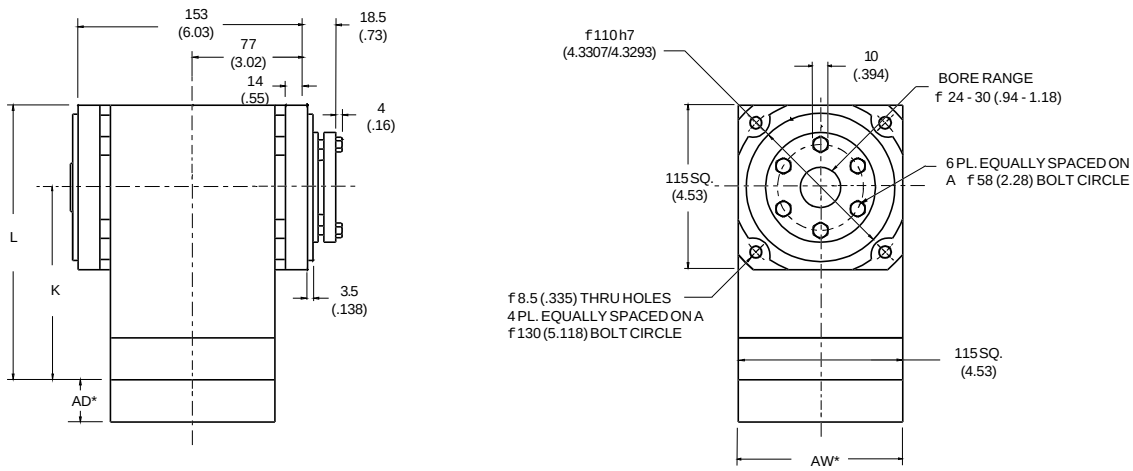

Ratio	Dimension 'K' mm *(in)*	Dimension 'L' mm *(in)*	Backlash (arc-min)	Weight Kg *(lb)*	Efficiency
1:1 to 5:1P	137 *(5.41)*	195 *(7.67)*	8 max	9 *(20)*	95%
5:1T to 50:1	169 *(6.64)*	226 *(8.90)*	9 max	11 *(24)*	90%
60:1 to 500:1	200 *(7.87)*	257 *(10.13)*	9 max	12 *(27)*	85%

* AD = Adapter length.
* AW = Adapter width.
Adapter length and width will vary depending on motor.
Consult Factory for details.

All Dimensions are: mm (inches)

(TABLE 1) PERFORMANCE SPECIFICATIONS

	Part Number	Ratio[1]	5,000 HOUR LIFE T_r (1000 rpm) Nm *(in-lb)*	5,000 HOUR LIFE T_r (3000 rpm) Nm *(in-lb)*	5,000 HOUR LIFE T_r (5000 rpm) Nm *(in-lb)*	T_{peak} Nm *(in-lb)*	10,000 HOUR LIFE T_r (1000 rpm) Nm *(in-lb)*	10,000 HOUR LIFE T_r (3000 rpm) Nm *(in-lb)*	10,000 HOUR LIFE T_r (5000 rpm) Nm *(in-lb)*	J kg-cm² *(in-lb-sec² x10⁻⁴)*	Torsional Stiffness Nm/arc-min *(in-lb/arc-min)*
True Planetary and PowerTrue* Technology*	**DTR115H-001**	1:1	63 (554)	57 (506)	52 (457)	283 (2505)	58 (512)	53 (467)	48 (422)	5.28 (46.7)	7.6 (67.6)
	DTR115H-002	2:1	112 (989)	102 (903)	92 (816)	283 (2505)	103 (913)	94 (834)	85 (754)	2.71 (23.9)	12.5 (111)
	DTR115H-003	3:1	87 (768)	79 (701)	72 (634)	283 (2505)	80 (709)	73 (647)	66 (585)	2.33 (20.6)	14.2 (126)
	DTR115H-004	4:1	58 (511)	53 (467)	48 (422)	283 (2505)	53 (472)	49 (431)	44 (390)	2.16 (19.1)	14.9 (132)
	DTR115H-005P	5:1P	43 (384)	40 (350)	36 (316)	283 (2505)	40 (354)	37 (323)	33 (292)	2.12 (18.8)	15.3 (135)
	DTR115H-005T	5:1T	170 (1505)	126 (1117)	108 (958)	283 (2505)	143 (1262)	102 (907)	88 (778)	2.78 (24.6)	15.3 (135)
	DTR115H-006	6:1	131 (1163)	112 (989)	109 (960)	283 (2505)	129 (1138)	103 (913)	100 (887)	2.77 (24.5)	10.2 (90.7)
	DTR115H-009	9:1	102 (903)	87 (768)	84 (746)	283 (2505)	100 (884)	80 (709)	78 (689)	2.32 (20.5)	12.8 (113)
	DTR115H-010	10:1	135 (1198)	124 (1094)	112 (989)	283 (2505)	134 (1183)	118 (1048)	103 (913)	2.63 (23.2)	10.2 (90.3)
	DTR115H-012	12:1	68 (601)	58 (511)	56 (496)	283 (2505)	66 (588)	53 (472)	52 (458)	2.22 (19.6)	14.0 (124)
	DTR115H-015	15:1	105 (930)	96 (849)	87 (768)	283 (2505)	104 (919)	92 (814)	80 (709)	2.18 (19.3)	14.6 (130)
	DTR115H-020	20:1	70 (619)	64 (565)	58 (511)	283 (2505)	69 (612)	61 (542)	53 (472)	2.08 (18.4)	14.0 (124)
	DTR115H-025	25:1	52 (465)	48 (424)	43 (384)	283 (2505)	52 (459)	46 (406)	40 (354)	2.04 (18.0)	14.6 (129)
	DTR115H-030	30:1	107 (951)	103 (910)	98 (869)	283 (2505)	107 (945)	101 (892)	95 (840)	2.13 (18.9)	12.5 (111)
	DTR115H-040	40:1	72 (633)	68 (606)	65 (579)	283 (2505)	71 (629)	67 (594)	63 (559)	2.03 (18.0)	13.8 (122)
	DTR115H-050	50:1	54 (475)	51 (454)	49 (434)	283 (2505)	53 (472)	50 (446)	47 (419)	1.99 (17.6)	14.5 (128)
	DTR115H-060	60:1	140 (1242)	138 (1224)	136 (1207)	283 (2505)	140 (1239)	137 (1217)	135 (1194)	2.78 (24.6)	10.0 (88.5)
	DTR115H-075	75:1	109 (963)	107 (947)	105 (930)	283 (2505)	109 (960)	106 (939)	104 (919)	2.22 (19.7)	12.7 (112)
	DTR115H-090	90:1	109 (964)	107 (951)	106 (937)	283 (2505)	109 (962)	107 (945)	105 (927)	2.33 (20.6)	12.6 (112)
	DTR115H-100	100:1	141 (1245)	140 (1235)	138 (1224)	283 (2505)	141 (1244)	139 (1230)	137 (1217)	2.64 (23.3)	10.1 (89.5)
	DTR115H-120	120:1	73 (642)	72 (633)	70 (624)	283 (2505)	72 (641)	71 (629)	70 (617)	2.23 (19.7)	13.9 (123)
	DTR115H-125	125:1	54 (481)	53 (473)	52 (465)	283 (2505)	54 (480)	53 (469)	52 (459)	2.08 (18.4)	14.6 (129)
	DTR115H-150	150:1	109 (967)	108 (959)	107 (951)	283 (2505)	109 (966)	108 (955)	107 (945)	2.19 (19.4)	12.7 (112)
	DTR115H-200	200:1	141 (1248)	140 (1243)	140 (1237)	283 (2505)	141 (1247)	140 (1240)	139 (1234)	2.59 (22.9)	9.8 (87.1)
	DTR115H-250	250:1	55 (483)	54 (479)	54 (475)	283 (2505)	54 (482)	54 (477)	53 (472)	2.05 (18.1)	14.6 (129)
	DTR115H-300	300:1	109 (969)	109 (965)	109 (961)	283 (2505)	109 (968)	109 (963)	108 (958)	2.14 (18.9)	12.5 (111)
	DTR115H-400	400:1	73 (645)	73 (642)	72 (640)	283 (2505)	73 (645)	72 (641)	72 (638)	2.04 (18.1)	13.8 (122)
	DTR115H-500	500:1	55 (484)	54 (482)	54 (480)	283 (2505)	55 (483)	54 (481)	54 (478)	2.00 (17.7)	14.5 (128)

[1] Ratios are exact, higher ratios are also available, consult factory.
T_{peak} = Allowable momentary peak torque for emergency stop or heavy shock loading.
J = Mass moment of inertia reflected back to the input.

For ordering information see page DTR13
For radial and axial loads see page DTR11

High Precision

* Trademark of Thomson Industries, Inc. THOMSON is registered in the U.S. Patent Office and in other countries.
© 1997 Thomson Micron, LLC

THOMSON MICRON*
Leading in Motion Control Technology
(516) 467-8000 • FAX (516) 467-9814 • www.thomsonind.com

DuraTRUE 90* Size 142H *(HOLLOW SHAFT)*
Right Angle Gearhead Metric

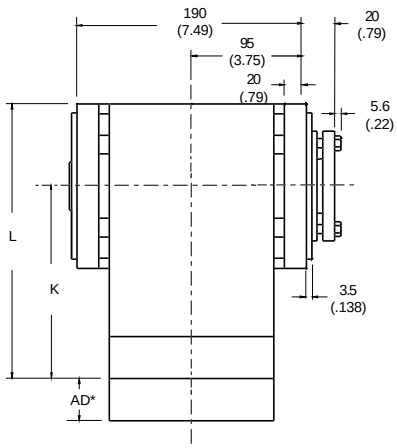

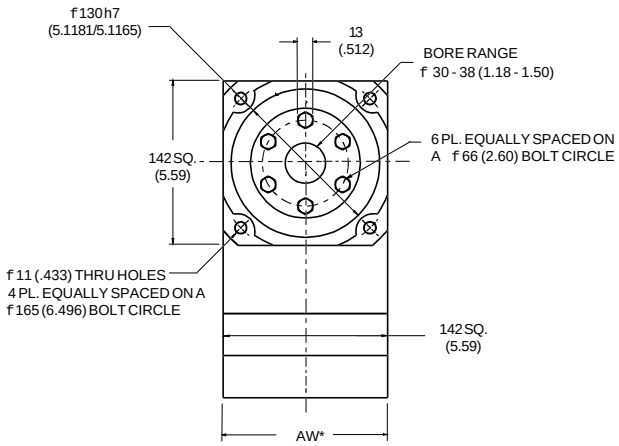

Ratio	Dimension 'K' mm *(in)*	Dimension 'L' mm *(in)*	Backlash (arc-min)	Weight Kg *(lb)*	Efficiency
1:1 to 5:1P	163 *(6.43)*	234 *(9.22)*	8 max	19 *(43)*	95%
5:1T to 50:1	233 *(9.17)*	304 *(11.96)*	9 max	24 *(53)*	90%
60:1 to 500:1	262 *(10.3)*	332 *(13.10)*	9 max	28 *(62)*	85%

* AD = Adapter length.
* AW = Adapter width.
Adapter length and width will vary depending on motor.
Consult Factory for details.

All Dimensions are: mm (inches)

High Precision

(TABLE 1) PERFORMANCE SPECIFICATIONS

	Part Number	Ratio[1]	5,000 HOUR LIFE T_r (1000 rpm) Nm *(in-lb)*	5,000 HOUR LIFE T_r (3000 rpm) Nm *(in-lb)*	5,000 HOUR LIFE T_r (5000 rpm) Nm *(in-lb)*	T_{peak} Nm *(in-lb)*	10,000 HOUR LIFE T_r (1000 rpm) Nm *(in-lb)*	10,000 HOUR LIFE T_r (3000 rpm) Nm *(in-lb)*	10,000 HOUR LIFE T_r (5000 rpm) Nm *(in-lb)*	J kg-cm² *(in-lb-sec² x10⁻⁴)*	Torsional Stiffness Nm/arc-min *(in-lb/arc-min)*
True Planetary and PowerTrue* Technology*	**DTR142H-001**	1:1	135 (1194)	123 (1090)	111 (985)	865 (7659)	125 (1103)	114 (1006)	103 (910)	26.3 (232)	23.7 (210)
	DTR142H-002	2:1	279 (2474)	255 (2257)	231 (2041)	865 (7659)	258 (2284)	236 (2084)	213 (1885)	13.5 (119)	38.9 (344)
	DTR142H-003	3:1	188 (1663)	171 (1518)	155 (1372)	865 (7659)	174 (1536)	158 (1401)	143 (1267)	11.6 (102)	44.1 (390)
	DTR142H-004	4:1	135 (1194)	123 (1090)	111 (985)	865 (7659)	125 (1103)	114 (1006)	103 (910)	10.8 (95.1)	46.3 (410)
	DTR142H-005P	5:1P	101 (896)	92 (818)	84 (739)	865 (7659)	93 (827)	85 (755)	77 (683)	10.6 (93.3)	47.4 (419)
	DTR142H-005T	5:1T	340 (3009)	289 (2559)	281 (2484)	865 (7659)	333 (2944)	267 (2363)	259 (2294)	13.8 (122)	47.4 (419)
	DTR142H-006	6:1	329 (2909)	279 (2474)	271 (2402)	865 (7659)	322 (2846)	258 (2284)	251 (2218)	13.8 (122)	31.8 (281)
	DTR142H-009	9:1	221 (1956)	188 (1663)	182 (1614)	865 (7659)	216 (1913)	174 (1536)	168 (1491)	11.6 (102)	39.6 (351)
	DTR142H-010	10:1	339 (2996)	309 (2735)	279 (2474)	865 (7659)	334 (2958)	296 (2621)	258 (2284)	13.1 (116)	31.6 (280)
	DTR142H-012	12:1	159 (1404)	135 (1194)	131 (1159)	865 (7659)	155 (1374)	125 (1103)	121 (1071)	11.1 (97.7)	43.4 (384)
	DTR142H-015	15:1	228 (2014)	208 (1839)	188 (1663)	865 (7659)	225 (1989)	199 (1762)	174 (1536)	10.9 (95.9)	45.4 (402)
	DTR142H-020	20:1	163 (1446)	149 (1320)	135 (1194)	865 (7659)	161 (1428)	143 (1265)	125 (1103)	10.4 (91.5)	43.3 (383)
	DTR142H-025	25:1	123 (1085)	112 (991)	101 (896)	865 (7659)	121 (1071)	107 (949)	93 (827)	10.2 (89.8)	45.3 (401)
	DTR142H-030	30:1	233 (2058)	223 (1970)	213 (1882)	865 (7659)	231 (2045)	218 (1932)	205 (1819)	10.6 (93.8)	38.8 (343)
	DTR142H-040	40:1	167 (1478)	160 (1415)	153 (1352)	865 (7659)	166 (1469)	157 (1387)	148 (1306)	10.1 (89.4)	42.8 (379)
	DTR142H-050	50:1	125 (1109)	120 (1061)	115 (1014)	865 (7659)	125 (1102)	118 (1041)	111 (980)	9.91 (87.6)	45.0 (398)
	DTR142H-060	60:1	351 (3105)	346 (3061)	341 (3018)	865 (7659)	350 (3099)	344 (3042)	337 (2986)	13.8 (122)	31.0 (274)
	DTR142H-075	75:1	236 (2084)	232 (2049)	228 (2014)	865 (7659)	235 (2079)	230 (2034)	225 (1989)	11.1 (97.9)	39.4 (348)
	DTR142H-090	90:1	236 (2087)	233 (2058)	229 (2029)	865 (7659)	235 (2083)	231 (2045)	227 (2008)	11.6 (103)	39.1 (346)
	DTR142H-100	100:1	352 (3114)	349 (3088)	346 (3061)	865 (7659)	351 (3110)	348 (3076)	344 (3042)	13.1 (116)	31.3 (278)
	DTR142H-120	120:1	169 (1499)	167 (1478)	165 (1457)	865 (7659)	169 (1496)	166 (1469)	163 (1442)	11.1 (98.2)	43.0 (380)
	DTR142H-125	125:1	127 (1123)	125 (1104)	123 (1085)	865 (7659)	127 (1120)	124 (1096)	121 (1071)	10.4 (91.7)	45.3 (401)
	DTR142H-150	150:1	237 (2093)	235 (2076)	233 (2058)	865 (7659)	236 (2091)	234 (2068)	231 (2045)	10.9 (96.4)	39.3 (348)
	DTR142H-200	200:1	353 (3120)	351 (3107)	350 (3094)	865 (7659)	352 (3118)	350 (3101)	349 (3085)	12.9 (114)	30.5 (270)
	DTR142H-250	250:1	127 (1128)	126 (1118)	125 (1109)	865 (7659)	127 (1126)	126 (1114)	125 (1102)	10.2 (90.3)	45.2 (400)
	DTR142H-300	300:1	237 (2098)	236 (2089)	235 (2080)	865 (7659)	237 (2096)	236 (2085)	234 (2074)	10.7 (94.3)	38.8 (343)
	DTR142H-400	400:1	170 (1506)	169 (1500)	169 (1494)	865 (7659)	170 (1505)	169 (1497)	168 (1489)	10.2 (89.8)	42.8 (379)
	DTR142H-500	500:1	128 (1130)	127 (1125)	127 (1121)	865 (7659)	128 (1129)	127 (1123)	126 (1117)	9.96 (88.1)	45.0 (398)

[1] Ratios are exact, higher ratios are also available, consult factory.
T_{peak} = Allowable momentary peak torque for emergency stop or heavy shock loading.
J = Mass moment of inertia reflected back to the input.

For ordering information see page DTR13
For radial and axial loads see page DTR11

THOMSON MICRON
Leading in Motion Control Technology
(516) 467-8000 • FAX (516) 467-9814 • www.thomsonind.com

The specifications and data in this publication are believed to be accurate and reliable. However, it is the responsibility of the product user to determine the suitability of Thomson Micron products for a specific application. While defective products will be replaced without charge if promptly returned, no liability is assumed beyond such replacement.

RADIAL AND AXIAL LOAD RATINGS (Table 2)

The graphs below display the allowable radial load at a given distance (X) from the mounting surface based on an L_{10} life of 10,000 hours for the mean output speed, $\frac{n_m}{i}$ (see page DTR12).

DTR60S Radial Load Ratings

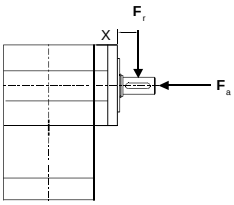

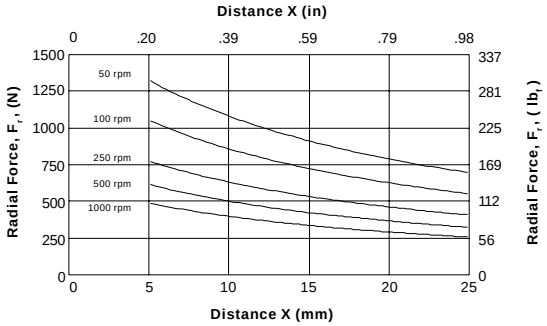

DTR60S Axial Load Ratings

Speed (rpm)	Axial Load, F_a N (lb_f)	
50	2155	*(484)*
100	1710	*(384)*
250	1260	*(283)*
500	1000	*(225)*
1000	794	*(178)*

DTR90S Radial Load Ratings

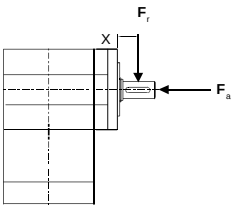

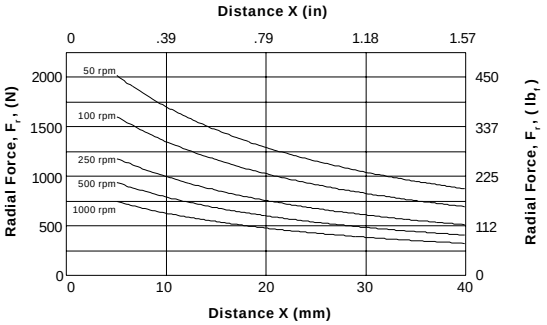

DTR90S Axial Load Ratings

Speed (rpm)	Axial Load, F_a N (lb_f)	
50	3157	(710)
100	2506	(563)
250	1846	(415)
500	1465	(329)
1000	1163	(261)

DTR115S Radial Load Ratings

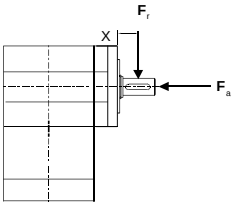

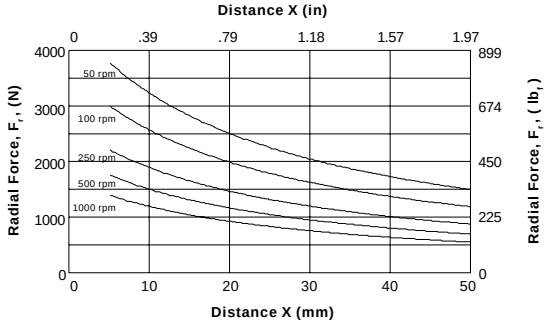

DTR115S Axial Load Ratings

Speed (rpm)	Axial Load, F_a N (lb_f)	
50	5742	(1291)
100	4558	(1025)
250	3358	(755)
500	2665	(599)
1000	2115	(476)

DTR142S Radial Load Ratings

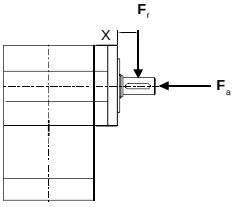

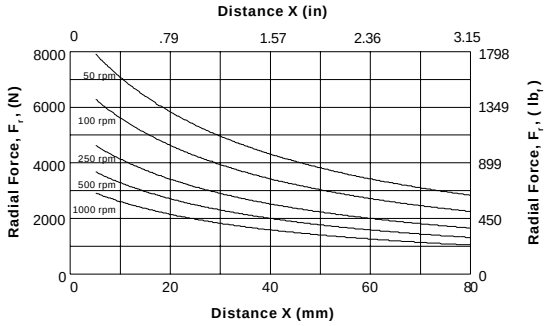

DTR142S Axial Load Ratings

Speed (rpm)	Axial Load, F_a N (lb_f)	
50	11,925	(2681)
100	9465	(2128)
250	6974	(1568)
500	5535	(1244)
1000	4393	(988)

* Trademark of Thomson Industries, Inc. THOMSON is registered in the U.S. Patent Office and in other countries.
© 1997 Thomson Micron, LLC

THOMSON MICRON*
Leading in Motion Control Technology
(516) 467-8000 • FAX (516) 467-9814 • www.thomsonind.com

AccuTRUE*
*TRUE PLANETARY**Gearheads

Ready for Immediate Delivery

Precision: 6 arc-minutes
Frame Sizes: 60, 75, 100, 142, 180mm
Torque Capacity: up to 27,444 in-lb

Ratio Availability: 3:1 thru 100:1
Radial load capacity: up to 7500 lb
Mounting system: AccuMount*

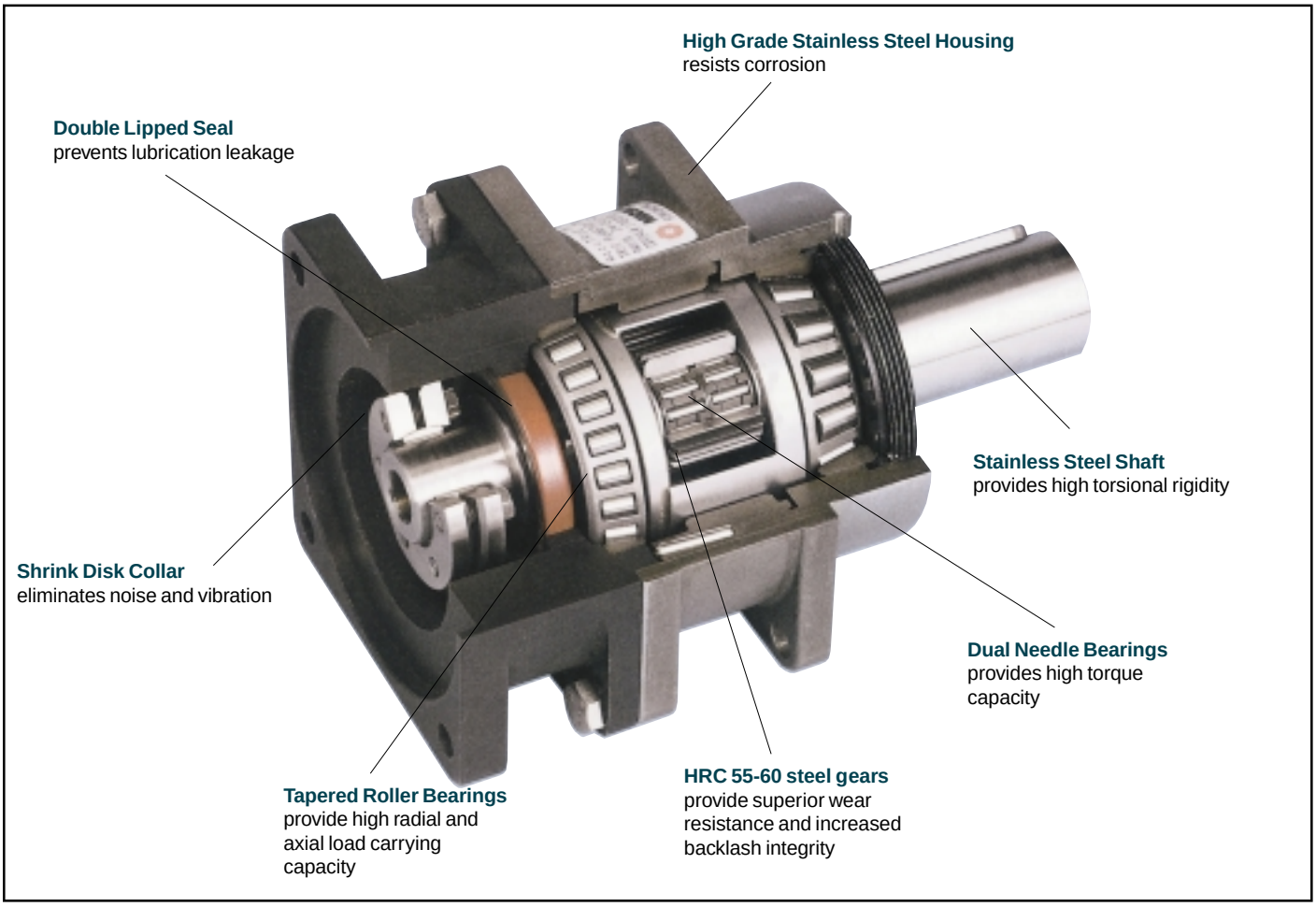

Index Page

AccuTRUE Size 6 Planetary Gearhead.....AT2
AccuTRUE Size 7.5 Planetary Gearhead.....AT3
AccuTRUE Size 10 Planetary Gearhead.....AT4
AccuTRUE Size 14 Planetary Gearhead.....AT5
AccuTRUE Size 18 Planetary Gearhead.....AT6
AccuTRUE Size 18t Planetary Gearhead.....AT7
Selection.....11
Mounting Tools.....80
Ordering.....Inside Back Cover
Free motor mounting book.....Call 1-888-55-4-Motion

The specifications and data in this publication are believed to be accurate and reliable. However, it is the responsibility of the product user to determine the suitability of Thomson Micron products for a specific application. While defective products will be replaced without charge if promptly returned, no liability is assumed beyond such replacement. © 1998 Thomson Micron, LLC
* Trademark of Thomson Industries, Inc. THOMSON is registered in the U.S. Patent and Trademark Office and in other countries.

AccuTRUE* Size 6
*TRUE PLANETARY** Gearhead

Metric

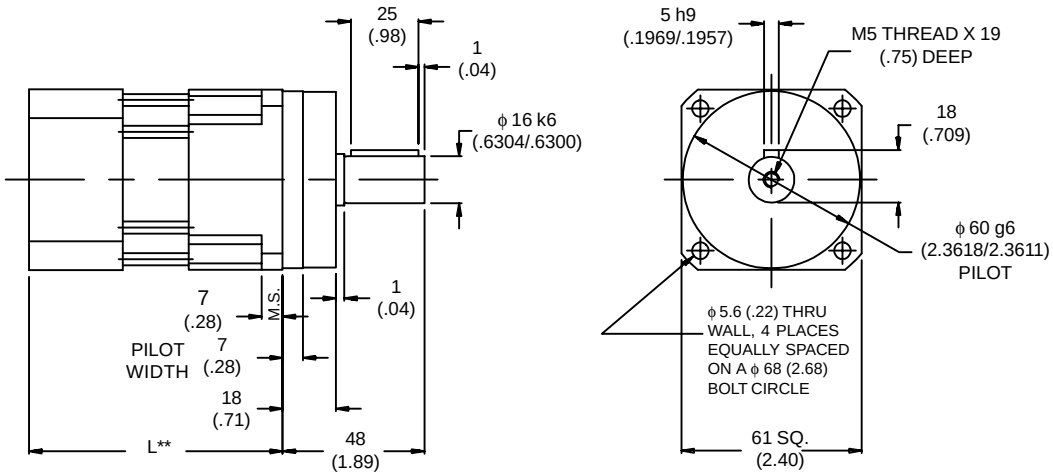

Ratio	Dimension 'L' mm *(in.)*	Backlash (arc-min)		Weight kg *(lb)*	Efficiency
		Super Precision	Ultra Precision		
3:1 to 10:1	87 (3.43)	6 max	4 max	2 (4.4)	90%
16:1 to 100:1	107 (4.21)	7 max	5 max	2.5 (5.5)	85%

**Based on a motor shaft length of 25 (.98)
Length will vary depending on motor.
Call 1-888-55-4-MOTION for your free Motor Mounting Catalog.

All Dimensions are: mm (inches)

Figure AT6

(TABLE 1) PERFORMANCE SPECIFICATIONS

Part Number	Ratio[1]	10,000 HOUR LIFE									
		T_r (1000 rpm) Nm *(in-lb)*		T_r (3000 rpm) Nm *(in-lb)*		T_r (5000 rpm) Nm *(in-lb)*		T_{peak} Nm *(in-lb)*		J kg-cm² *(in-lb-sec²x10⁻⁴)*		Torsional Stiffness Nm/arc-min *(in-lb/arc-min)*	
AT006-003	3:1	31	*(274)*	23	*(204)*	19	*(168)*	85	*(752)*	.26	*(2.3)*	3.5	(31)
AT006-004	4:1	41	*(363)*	29	*(257)*	25	*(221)*	114	*(1009)*	.17	*(1.5)*	3.5	(31)
AT006-005	5:1	44	*(389)*	35	*(310)*	30	*(266)*	115	*(1018)*	.11	*(.97)*	3.5	(31)
AT006-007	7:1	42	*(372)*	33	*(292)*	28	*(248)*	106	*(938)*	.09	*(.80)*	3.5	(31)
AT006-8.2	8.2:1	34	*(301)*	29	*(257)*	27	*(239)*	100	*(885)*	.09	*(.80)*	3.5	(31)
AT006-010	10:1	20	*(177)*	17	*(150)*	16	*(142)*	103	*(912)*	.08	*(.71)*	3.5	(31)
AT006-016	16:1	50	*(443)*	44	*(389)*	38	*(336)*	72	*(637)*	.13	*(1.2)*	3.5	(31)
AT006-020	20:1	47	*(416)*	45	*(398)*	44	*(389)*	90	*(797)*	.13	*(1.2)*	3.5	(31)
AT006-028	28:1	45	*(398)*	43	*(381)*	41	*(363)*	110	*(974)*	.13	*(1.2)*	3.5	(31)
AT006-040	40:1	52	*(460)*	50	*(443)*	48	*(425)*	72	*(637)*	.08	*(.71)*	3.5	(31)
AT006-050	50:1	49	*(434)*	47	*(416)*	46	*(407)*	90	*(797)*	.08	*(.71)*	3.5	(31)
AT006-070	70:1	47	*(416)*	45	*(398)*	44	*(389)*	110	*(974)*	.08	*(.71)*	3.5	(31)
AT006-100	100:1	26	*(230)*	23	*(204)*	22	*(195)*	113	*(1000)*	.08	*(.71)*	3.5	(31)

[1] Ratios are exact, higher ratios are also available, consult factory.
T_r = Rated output torque at rated speed for specified hours of life.
J = Mass moment of inertia reflected to the input shaft (including pinion assembly).

For ordering information see inside back cover

See page 11 for gearhead selection criteria

(TABLE 2) RADIAL AND AXIAL LOAD RATINGS

This graph displays the allowable radial load at a given distance (X) from the mounting surface based on an L_{10} life of 10,000 hours for the mean output speed, n_{mout}.

AT6 RADIAL LOADINGS

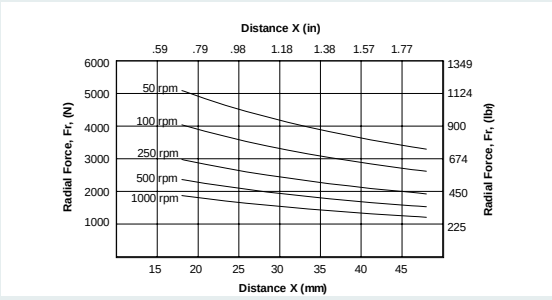

AT6 AXIAL LOADINGS

Speed (rpm)	Axial Load, F_a N *(lb_f)*
50	6543*(1471)*
100	5191*(1167)*
250	3825 *(860)*
500	3038 *(683)*
1000	2411 *(542)*

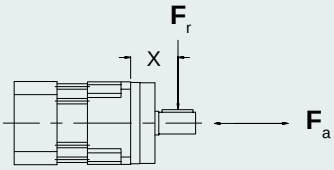

THOMSON MICRON™
Leading in Motion Control Technology
☎1-888-55-4-MOTION•FAX 516-467-9814•www.thomsonindustries.com

The specifications and data in this publication are believed to be accurate and reliable. However, it is the responsibility of the product user to determine the suitability of Thomson Micron products for a specific application. While defective products will be replaced without charge if promptly returned, no liability is assumed beyond such replacement. © 1998 Thomson Micron, LLC
* Trademark of Thomson Industries, Inc. THOMSON is registered in the U.S. Patent and Trademark Office and in other countries.

AccuTRUE* Size 7.5
*TRUE PLANETARY**Gearhead Metric

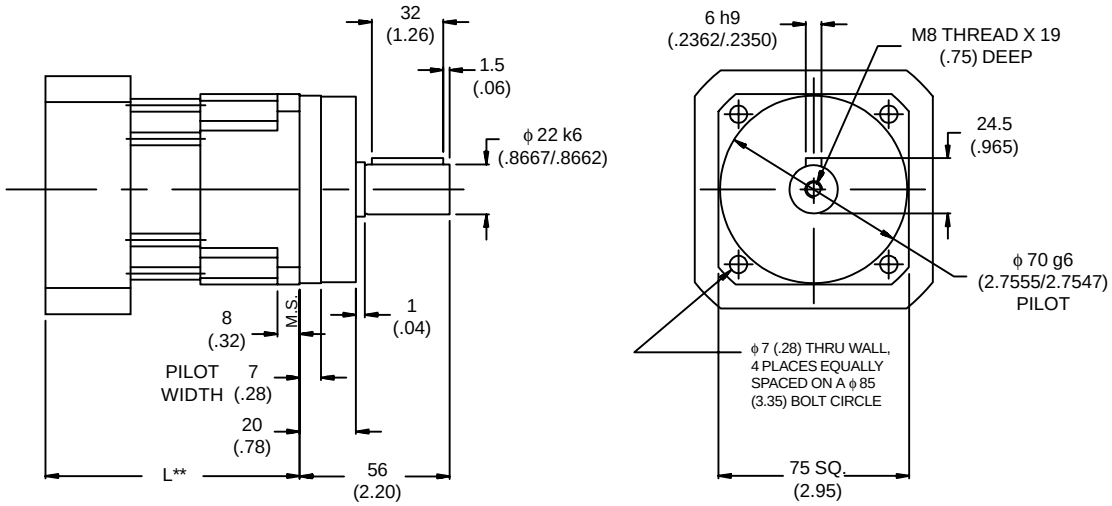

Ratio	Dimension 'L' mm *(in.)*	Backlash (arc-min) Super Precision	Backlash (arc-min) Ultra Precision	Weight kg *(lb)*	Efficiency
3:1 to 10:1	99 (3.90)	6 max	4 max	2.5 (5.5)	90%
16:1 to 100:1	125 (4.92)	7 max	5 max	3.0 (6.6)	85%

**Based on a motor shaft length of 30 (1.18)
Length will vary depending on motor.
Call 1-888-55-4-MOTION for your free Motor Mounting Catalog.

All Dimensions are: mm (inches)

Figure AT75

(TABLE 1) PERFORMANCE SPECIFICATIONS

Part Number	Ratio[1]	10,000 HOUR LIFE T_r (1000 rpm) Nm *(in-lb)*	T_r (3000 rpm) Nm *(in-lb)*	T_r (5000 rpm) Nm *(in-lb)*	T_{peak} Nm *(in-lb)*	J kg-cm² *(in-lb-sec²x10⁻⁴)*	Torsional Stiffness Nm/arc-min *(in-lb/arc-min)*
AT075-003	3:1	57 *(504)*	41 *(363)*	35 *(310)*	188 *(1664)*	.50 *(4.4)*	8.0 (71)
AT075-004	4:1	92 *(814)*	66 *(584)*	57 *(504)*	212 *(1876)*	.38 *(3.4)*	8.0 (71)
AT075-005	5:1	91 *(805)*	69 *(611)*	59 *(522)*	201 *(1779)*	.32 *(2.8)*	8.0 (71)
AT075-007	7:1	75 *(664)*	65 *(575)*	60 *(531)*	192 *(1699)*	.26 *(2.3)*	8.0 (71)
AT075-8.2	8.2:1	44 *(389)*	38 *(336)*	35 *(310)*	117 *(1035)*	.24 *(2.1)*	8.0 (71)
AT075-010	10:1	30 *(266)*	26 *(230)*	24 *(212)*	114 *(1009)*	.23 *(2.0)*	8.0 (71)
AT075-016	16:1	106 *(938)*	98 *(867)*	86 *(761)*	186 *(1646)*	.26 *(2.3)*	8.0 (71)
AT075-020	20:1	100 *(885)*	93 *(823)*	89 *(788)*	188 *(1664)*	.26 *(2.3)*	8.0 (71)
AT075-028	28:1	95 *(841)*	85 *(752)*	79 *(699)*	207 *(1832)*	.24 *(2.1)*	8.0 (71)
AT075-040	40:1	111 *(982)*	105 *(929)*	101 *(894)*	149 *(1319)*	.13 *(1.2)*	8.0 (71)
AT075-050	50:1	105 *(929)*	99 *(876)*	96 *(850)*	186 *(1646)*	.13 *(1.2)*	8.0 (71)
AT075-070	70:1	99 *(876)*	94 *(832)*	89 *(788)*	214 *(1894)*	.13 *(1.2)*	8.0 (71)
AT075-100	100:1	44 *(389)*	38 *(336)*	36 *(319)*	124 *(1097)*	.12 *(1.1)*	8.0 (71)

[1] Ratios are exact, higher ratios are also available, consult factory.
T_r = Rated output torque at rated speed for specified hours of life.
J = Mass moment of inertia reflected to the input shaft (including pinion assembly).

For ordering information see inside back cover

See page 11 for gearhead selection criteria

(TABLE 2) RADIAL AND AXIAL LOAD RATINGS

This graph displays the allowable radial load at a given distance (X) from the mounting surface based on an L_{10} life of 10,000 hours for the mean output speed, n_{mout}.

AT7.5 RADIAL LOADINGS

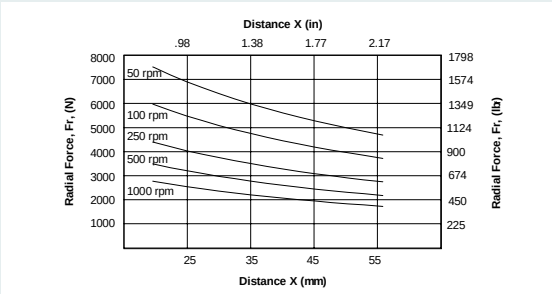

AT7.5 AXIAL LOADINGS

Speed (rpm)	Axial Load, F_a N *(lb_f)*
50	9003 (2024)
100	7148 (1607)
250	5266 (1184)
500	4181 (940)
1000	3318 (746)

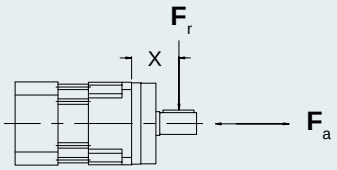

The specifications and data in this publication are believed to be accurate and reliable. However, it is the responsibility of the product user to determine the suitability of Thomson Micron products for a specific application. While defective products will be replaced without charge if promptly returned, no liability is assumed beyond such replacement. © 1998 Thomson Micron, LLC
* Trademark of Thomson Industries, Inc. THOMSON is registered in the U.S. Patent and Trademark Office and in other countries.

THOMSON MICRON™
Leading in Motion Control Technology
☎1-888-55-4-MOTION•FAX 516-467-9814•www.thomsonindustries.com

AccuTRUE* Size 10
*TRUE PLANETARY** Gearhead — Metric

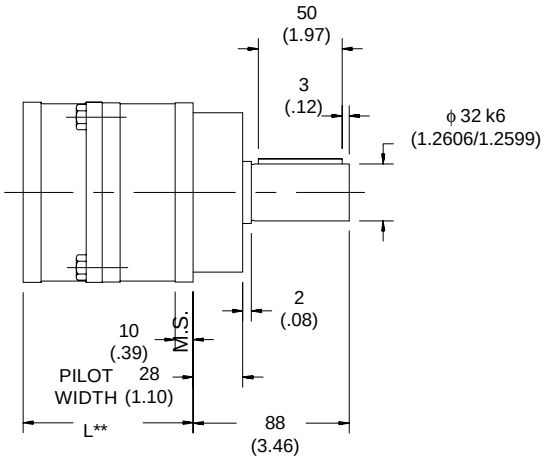

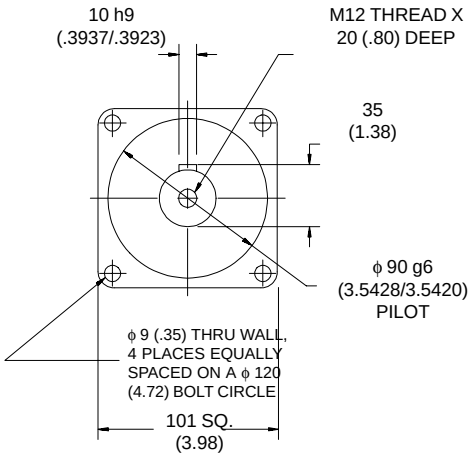

Ratio	Dimension 'L' mm *(in.)*	Backlash (arc-min) Super Precision	Backlash (arc-min) Ultra Precision	Weight kg *(lb)*	Efficiency
3:1 to 10:1	96 (3.78)	6 max	4 max	6.0 (13.2)	90%
16:1 to 100:1	128 (5.04)	7 max	5 max	8.0 (17.6)	85%

**Based on a motor shaft length of 40 (1.57)
Length will vary depending on motor.
Call 1-888-55-4-MOTION for your free Motor Mounting Catalog.

All Dimensions are: mm (inches)

Figure AT10

(TABLE 1) PERFORMANCE SPECIFICATIONS

Part Number	Ratio[1]	10,000 HOUR LIFE T_r (1000 rpm) Nm *(in-lb)*	T_r (2000 rpm) Nm *(in-lb)*	T_r (3000 rpm) Nm *(in-lb)*	T_{peak} Nm *(in-lb)*	J kg-cm² *(in-lb-sec²x10⁻⁴)*	Torsional Stiffness Nm/arc-min *(in-lb/arc-min)*
AT010-003	3:1	85 *(752)*	69 *(611)*	61 *(540)*	440 *(3894)*	2.5 *(22)*	25.0 (221)
AT010-004	4:1	164 *(1451)*	143 *(1266)*	126 *(1115)*	383 *(3390)*	1.6 *(14)*	25.0 (221)
AT010-005	5:1	185 *(1637)*	151 *(1336)*	133 *(1177)*	669 *(5921)*	1.3 *(12)*	25.0 (221)
AT010-006	6:1	156 *(1381)*	147 *(1301)*	136 *(1204)*	360 *(3186)*	1.1 *(9.7)*	25.0 (221)
AT010-008	8:1	100 *(885)*	95 *(841)*	91 *(805)*	230 *(2036)*	.97 *(8.6)*	25.0 (221)
AT010-010	10:1	62 *(549)*	56 *(496)*	53 *(469)*	148 *(1310)*	.90 *(8.0)*	25.0 (221)
AT010-016	16:1	181 *(1602)*	173 *(1531)*	168 *(1487)*	417 *(3690)*	1.1 *(9.7)*	25.0 (221)
AT010-020	20:1	281 *(2487)*	228 *(2018)*	202 *(1788)*	576 *(5098)*	1.1 *(9.7)*	25.0 (221)
AT010-025	25:1	300 *(2655)*	244 *(2159)*	216 *(1912)*	576 *(5098)*	.94 *(8.3)*	25.0 (221)
AT010-030	30:1	172 *(1522)*	166 *(1469)*	162 *(1434)*	390 *(3452)*	.94 *(8.3)*	25.0 (221)
AT010-040	40:1	191 *(1690)*	184 *(1628)*	179 *(1584)*	431 *(3814)*	.79 *(7.0)*	25.0 (221)
AT010-050	50:1	269 *(2381)*	245 *(2168)*	232 *(2053)*	576 *(5098)*	.78 *(6.9)*	25.0 (221)
AT010-060	60:1	179 *(1584)*	172 *(1522)*	169 *(1496)*	398 *(3522)*	.78 *(6.9)*	25.0 (221)
AT010-080	80:1	114 *(1009)*	110 *(974)*	108 *(956)*	252 *(2230)*	.78 *(6.9)*	25.0 (221)
AT010-100	100:1	73 *(646)*	71 *(628)*	70 *(620)*	161 *(1425)*	.78 *(6.9)*	25.0 (221)

[1] Ratios are exact, higher ratios are also available, consult factory.
T_r = Rated output torque at rated speed for specified hours of life.
J = Mass moment of inertia reflected to the input shaft (including pinion assembly).

For ordering information see inside back cover

See page 11 for gearhead selection criteria

(TABLE 2) RADIAL AND AXIAL LOAD RATINGS

This graph displays the allowable radial load at a given distance (X) from the mounting surface based on an L_{10} life of 10,000 hours for the mean output speed, n_{mout}.

AT10 RADIAL LOADINGS

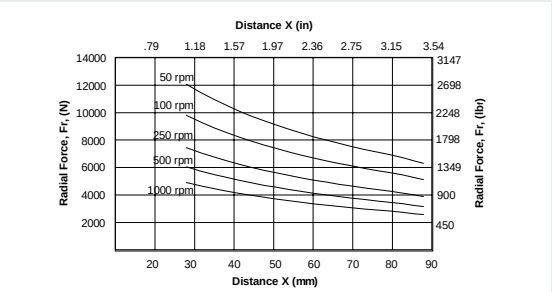

AT10 AXIAL LOADINGS

Speed (rpm)	Axial Load, F_a N *(lb_f)*
50	12,432 *(2795)*
100	10,097 *(2270)*
250	7668 *(1724)*
500	6232 *(1401)*
1000	5062 *(1138)*

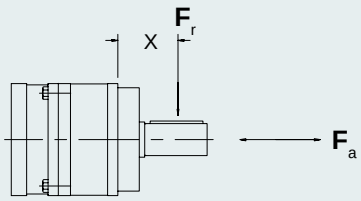

THOMSON MICRON™
Leading in Motion Control Technology
☎1-888-55-4-MOTION•FAX 516-467-9814•www.thomsonindustries.com

The specifications and data in this publication are believed to be accurate and reliable. However, it is the responsibility of the product user to determine the suitability of Thomson Micron products for a specific application. While defective products will be replaced without charge if promptly returned, no liability is assumed beyond such replacement. © 1998 Thomson Micron, LLC
* Trademark of Thomson Industries, Inc. THOMSON is registered in the U.S. Patent and Trademark Office and in other countries.

AccuTRUE* Size 14
*TRUE PLANETARY**Gearhead

Metric

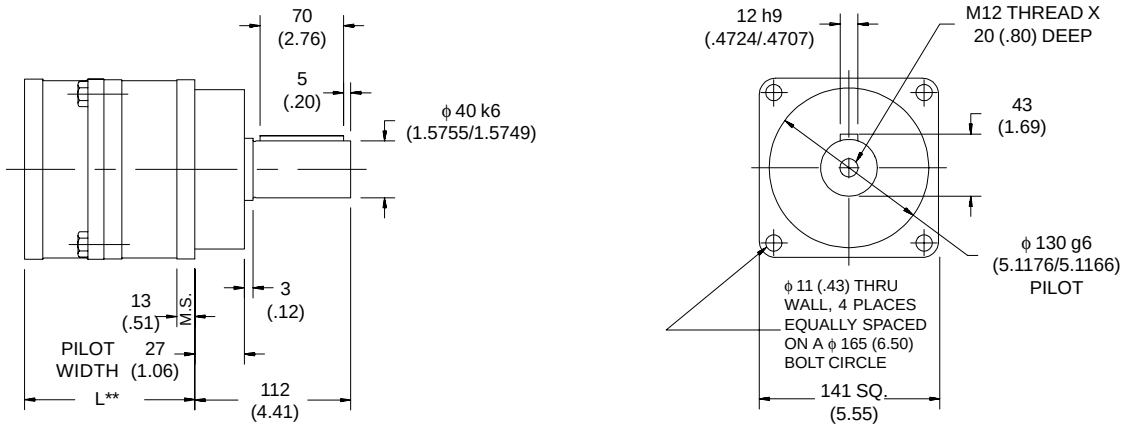

Ratio	Dimension 'L' mm *(in.)*	Backlash (arc-min) Super Precision	Backlash (arc-min) Ultra Precision	Weight kg *(lb)*	Efficiency
3:1 to 10:1	134 (5.28)	6 max	4 max	14.0(30.8)	90%
16:1 to 100:1	178 (7.01)	7 max	5 max	18.0(39.6)	85%

**Based on a motor shaft length of 50 (1.97)
Length will vary depending on motor.
Call 1-888-55-4-MOTION for your free Motor Mounting Catalog.

All Dimensions are: mm (inches)

Figure AT14

(TABLE 1) PERFORMANCE SPECIFICATIONS

Part Number	Ratio[1]	10,000 HOUR LIFE T_r (1000 rpm) Nm *(in-lb)*	T_r (2000 rpm) Nm *(in-lb)*	T_r (3000 rpm) Nm *(in-lb)*	T_{peak} Nm *(in-lb)*	J kg-cm² *(in-lb-sec²x10⁻³)*	Torsional Stiffness Nm/arc-min *(in-lb/arc-min)*
AT014-003	3:1	168 *(1487)*	137 *(1212)*	121 *(1071)*	1317 *(11,655)*	10.0 *(8.9)*	50.0 (443)
AT014-004	4:1	383 *(3390)*	311 *(2752)*	275 *(2434)*	1866 *(16,514)*	5.4 *(4.8)*	50.0 (443)
AT014-005	5:1	405 *(3584)*	329 *(2912)*	291 *(2575)*	1755 *(15,532)*	4.2 *(3.7)*	50.0 (443)
AT014-006	6:1	418 *(3699)*	340 *(3009)*	301 *(2664)*	1666 *(14,744)*	3.7 *(3.3)*	50.0 (443)
AT014-008	8:1	298 *(2637)*	270 *(2390)*	254 *(2248)*	1197 *(10,593)*	3.2 *(2.8)*	50.0 (443)
AT014-010	10:1	144 *(1274)*	136 *(1204)*	131 *(1159)*	326 *(2885)*	2.8 *(2.5)*	50.0 (443)
AT014-016	16:1	580 *(5133)*	471 *(4168)*	417 *(3690)*	1206 *(10,673)*	3.5 *(3.1)*	50.0 (443)
AT014-020	20:1	613 *(5425)*	498 *(4407)*	441 *(3903)*	1508 *(13,346)*	3.4 *(3.0)*	50.0 (443)
AT014-025	25:1	656 *(5806)*	533 *(4717)*	472 *(4177)*	1508 *(13,346)*	3.0 *(2.7)*	50.0 (443)
AT014-030	30:1	568 *(5027)*	544 *(4814)*	487 *(4310)*	1278 *(11,310)*	2.9 *(2.6)*	50.0 (443)
AT014-040	40:1	470 *(4160)*	445 *(3938)*	429 *(3797)*	1068 *(9452)*	2.5 *(2.2)*	50.0 (443)
AT014-050	50:1	587 *(5195)*	556 *(4921)*	536 *(4744)*	1335 *(11,815)*	2.4 *(2.1)*	50.0 (443)
AT014-060	60:1	589 *(5213)*	568 *(5027)*	554 *(4903)*	1309 *(11,585)*	2.4 *(2.1)*	50.0 (443)
AT014-080	80:1	358 *(3168)*	329 *(2912)*	313 *(2770)*	1359 *(12,027)*	2.4 *(2.1)*	50.0 (443)
AT014-100	100:1	164 *(1451)*	158 *(1398)*	155 *(1372)*	358 *(3168)*	2.4 *(2.1)*	50.0 (443)

[1] Ratios are exact, higher ratios are also available, consult factory.
T_r = Rated output torque at rated speed for specified hours of life.
J = Mass moment of inertia reflected to the input shaft (including pinion assembly).

For ordering information see inside back cover

See page 11 for gearhead selection criteria

(TABLE 2) RADIAL AND AXIAL LOAD RATINGS

This graph displays the allowable radial load at a given distance (X) from the mounting surface based on an L_{10} life of 10,000 hours for the mean output speed, n_{mout}.

AT14 RADIAL LOADINGS

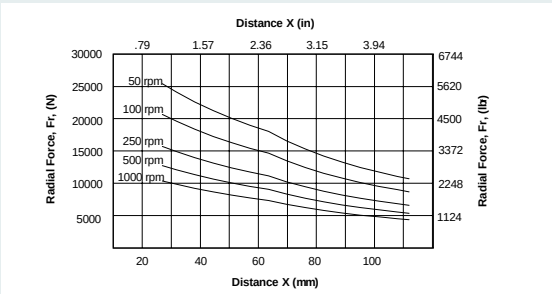

AT14 AXIAL LOADINGS

Speed (rpm)	Axial Load, F_a N *(lb_f)*
50	23,067 *(5186)*
100	18,735 *(4212)*
250	14,234 *(3200)*
500	11,560 *(2599)*
1000	9,390 *(2111)*

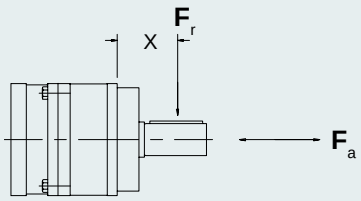

The specifications and data in this publication are believed to be accurate and reliable. However, it is the responsibility of the product user to determine the suitability of Thomson Micron products for a specific application. While defective products will be replaced without charge if promptly returned, no liability is assumed beyond such replacement. © 1998 Thomson Micron, LLC
* Trademark of Thomson Industries, Inc. THOMSON is registered in the U.S. Patent and Trademark Office and in other countries.

THOMSON MICRON™
Leading in Motion Control Technology
☎1-888-55-4-MOTION•FAX 516-467-9814•www.thomsonindustries.com

AccuTRUE* Size 18
*TRUE PLANETARY**Gearhead

Metric

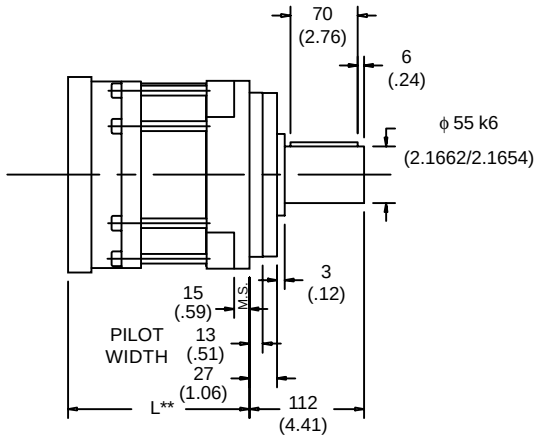

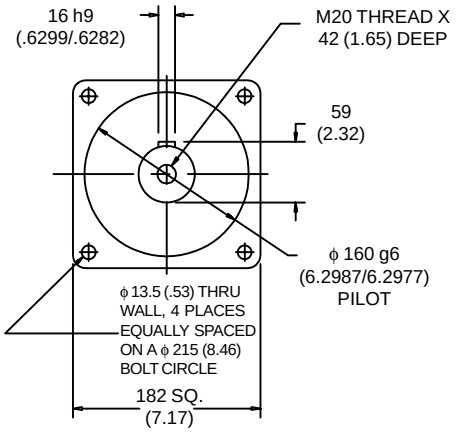

Ratio	Dimension 'L'* mm *(in.)*	Backlash (arc-min)		Weight kg *(lb)*	Efficiency
		Super Precision	Ultra Precision		
3:1 to 10:1	176 (6.93)	6 max	4 max	40.0 (88)	90%
16:1 to 100:1	239 (9.41)	7 max	5 max	45.0 (99)	85%

**Based on a motor shaft length of 60 (2.36)
Length will vary depending on motor.
Call 1-888-55-4-MOTION for your free Motor Mounting Catalog.

All Dimensions are: mm (inches)

Figure AT18

(TABLE 1) PERFORMANCE SPECIFICATIONS

Part Number	Ratio[1]	10,000 HOUR LIFE			T_{peak} Nm *(in-lb)*	J kg-cm² *(in-lb-sec²x10⁻²)*	Torsional Stiffness Nm/arc-min *(in-lb/arc-min)*
		T_r (1000 rpm) Nm *(in-lb)*	T_r (2000 rpm) Nm *(in-lb)*	T_r (3000 rpm) Nm *(in-lb)*			
AT018-003	3:1	480 *(4248)*	390 *(3452)*	345 *(3053)*	2000 *(17,700)*	45 *(4.0)*	85 (750)
AT018-004	4:1	872 *(7717)*	709 *(6275)*	627 *(5549)*	2667 *(23,603)*	21 *(1.9)*	85 (750)
AT018-005	5:1	907 *(8027)*	737 *(6522)*	653 *(5779)*	2927 *(25,904)*	15 *(1.3)*	85 (750)
AT018-007	7:1	969 *(8576)*	787 *(6965)*	697 *(6168)*	2897 *(25,638)*	10 *(.89)*	85 (750)
AT018-8.2	8.2:1	858 *(7593)*	776 *(6868)*	*718* *(6354)*	2586 *(22886)*	8.9 *(.79)*	85 (750)
AT018-010	10:1	477 *(4221)*	432 *(3823)*	406 *(3593)*	2296 *(20,320)*	7.5 *(.66)*	85 (750)
AT018-016	16:1	1322 *(11,700)*	1074 *(9505)*	951 *(8416)*	1772 *(15,682)*	22 *(1.9)*	85 (750)
AT018-020	20:1	1280 *(11,328)*	1117 *(9885)*	989 *(8753)*	2215 *(19,603)*	21 *(1.9)*	85 (750)
AT018-028	28:1	1261 *(11,160)*	1193 *(10,558)*	1056 *(9346)*	3101 *(27,444)*	21 *(1.9)*	85 (750)
AT018-040	40:1	1439 *(12,735)*	1378 *(12,195)*	1252 *(11,080)*	1772 *(15,682)*	7.4 *(.65)*	85 (750)
AT018-050	50:1	1353 *(11,974)*	1298 *(11,487)*	1264 *(11,186)*	2215 *(19603)*	7.3 *(.65)*	85 (750)
AT018-070	70:1	1329 *(11,762)*	1278 *(11,310)*	1247 *(11,036)*	3101 *(27,444)*	7.3 *(.65)*	85 (750)
AT018-100	100:1	668 *(5912)*	613 *(5425)*	583 *(5160)*	2563 *(22,683)*	7.2 *(.64)*	85 (750)

[1] Ratios are exact, higher ratios are also available, consult factory.
T_r = Rated output torque at rated speed for specified hours of life.
J = Mass moment of inertia reflected to the input shaft (including pinion assembly).

For ordering information see inside back cover

See page 11 for gearhead selection criteria

(TABLE 2) RADIAL AND AXIAL LOAD RATINGS

This graph displays the allowable radial load at a given distance (X) from the mounting surface based on an L_{10} life of 10,000 hours for the mean output speed, n_{mout}.

AT18 RADIAL LOADINGS

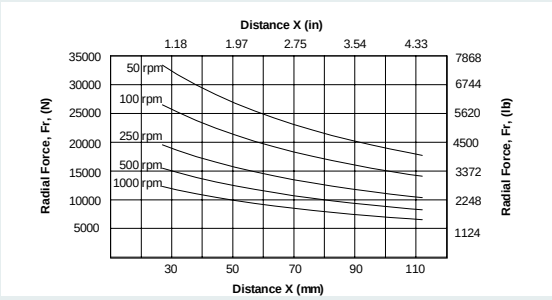

AT18 AXIAL LOADINGS

Speed (rpm)	Axial Load, F_a N *(lb_f)*
50	31,398 *(7059)*
100	24,922 *(5603)*
250	18,361 *(4128)*
500	14,576 *(3277)*
1000	11,569 *(2601)*

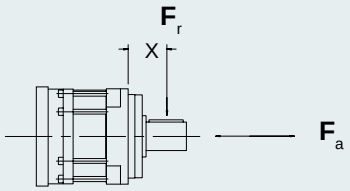

THOMSON MICRON™
Leading in Motion Control Technology
☎1-888-55-4-MOTION•FAX 516-467-9814•www.thomsonindustries.com

The specifications and data in this publication are believed to be accurate and reliable. However, it is the responsibility of the product user to determine the suitability of Thomson Micron products for a specific application. While defective products will be replaced without charge if promptly returned, no liability is assumed beyond such replacement. © 1998 Thomson Micron, LLC
* Trademark of Thomson Industries, Inc. THOMSON is registered in the U.S. Patent and Trademark Office and in other countries.

AccuTRUE* Size 18t
*TRUE PLANETARY** Gearhead — Metric

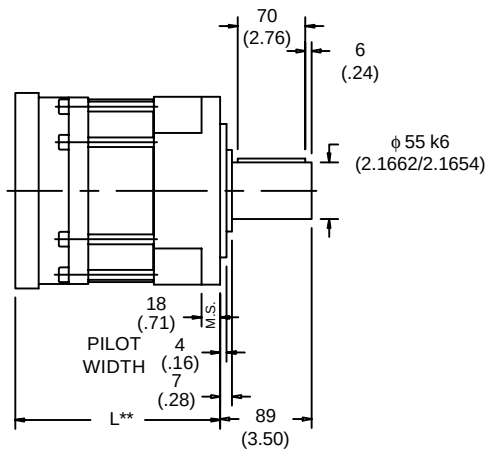

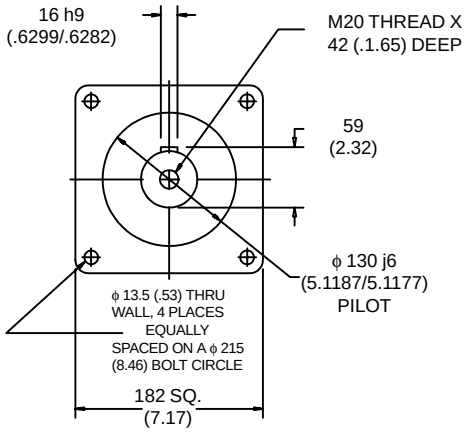

Ratio	Dimension 'L'* mm *(in.)*	Backlash (arc-min) Super Precision	Backlash (arc-min) Ultra Precision	Weight kg *(lb)*	Efficiency
3:1 to 10:1	199 (7.8)	6 max	4 max	40.0 (88)	90%
16:1 to 100:1	262 (10.3)	7 max	5 max	45.0 (99)	85%

**Based on a motor shaft length of 60 (2.36)
Length will vary depending on motor.
Call 1-888-55-4-MOTION for your free Motor Mounting Catalog.

All Dimensions are: mm (inches)

Figure AT18t

(TABLE 1) PERFORMANCE SPECIFICATIONS

Part Number	Ratio[1]	10,000 HOUR LIFE T_r (1000 rpm) Nm *(in-lb)*	T_r (2000 rpm) Nm *(in-lb)*	T_r (3000 rpm) Nm *(in-lb)*	T_{peak} Nm *(in-lb)*	J kg-cm² *(in-lb-sec²x10⁻²)*	Torsional Stiffness Nm/arc-min *(in-lb/arc-min)*
AT018t -003	3:1	480 *(4248)*	390 *(3452)*	345 *(3053)*	2000 *(17,700)*	45 *(4.0)*	85 (750)
AT018t - 004	4:1	872 *(7717)*	709 *(6275)*	627 *(5549)*	2667 *(23,603)*	21 *(1.9)*	85 (750)
AT018t - 005	5:1	907 *(8027)*	737 *(6522)*	653 *(5779)*	2927 *(25,904)*	15 *(1.3)*	85 (750)
AT018t - 007	7:1	969 *(8576)*	787 *(6965)*	697 *(6168)*	2897 *(25,638)*	10 *(.89)*	85 (750)
AT018t - 8.2	8.2:1	858 *(7593)*	776 *(6868)*	*718* *(6354)*	2586 *(22886)*	8.9 *(.79)*	85 (750)
AT018t - 010	10:1	477 *(4221)*	432 *(3823)*	406 *(3593)*	2296 *(20,320)*	7.5 *(.66)*	85 (750)
AT018t - 016	16:1	1322 *(11,700)*	1074 *(9505)*	951 *(8416)*	1772 *(15,682)*	22 *(1.9)*	85 (750)
AT018t - 020	20:1	1280 *(11,328)*	1117 *(9885)*	989 *(8753)*	2215 *(19,603)*	21 *(1.9)*	85 (750)
AT018 - 028	28:1	1261 *(11,160)*	1193 *(10,558)*	1056 *(9346)*	3101 *(27,444)*	21 *(1.9)*	85 (750)
AT018t - 040	40:1	1439 *(12,735)*	1378 *(12,195)*	1252 *(11,080)*	1772 *(15,682)*	7.4 *(.65)*	85 (750)
AT018t-050	50:1	1353 *(11,974)*	1298 *(11,487)*	1264 *(11,186)*	2215 *(19,603)*	7.3 *(.65)*	85 (750)
AT018t-070	70:1	1329 *(11,762)*	1278 *(11,310)*	1247 *(11,036)*	3101 *(27,444)*	7.3 *(.65)*	85 (750)
AT018t-100	100:1	668 *(5912)*	613 *(5425)*	583 *(5160)*	2563 *(22,683)*	7.2 *(.64)*	85 (750)

[1] Ratios are exact, higher ratios are also available, consult factory.
T_r = Rated output torque at rated speed for specified hours of life.
J = Mass moment of inertia reflected to the input shaft (including pinion assembly).

For ordering information see inside back cover

See page 11 for gearhead selection criteria

(TABLE 2) RADIAL AND AXIAL LOAD RATINGS

This graph displays the allowable radial load at a given distance (X) from the mounting surface based on an L_{10} life of 10,000 hours for the mean output speed, n_{mout}.

AT18t RADIAL LOADINGS

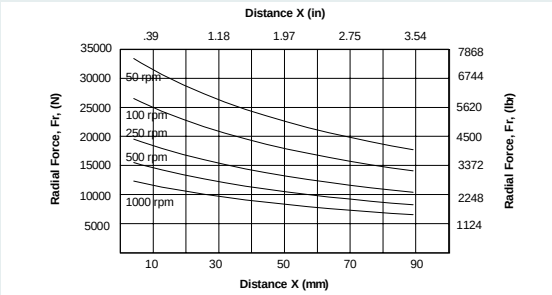

AT18t AXIAL LOADINGS

Speed (rpm)	Axial Load, F_a N *(lb_f)*
50	31,398 *(7059)*
100	24,922 *(5603)*
250	18,361 *(4128)*
500	14,576 *(3277)*
1000	11,569 *(2601)*

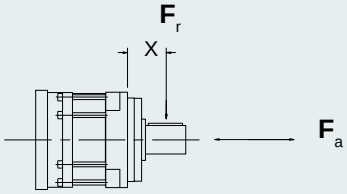

The specifications and data in this publication are believed to be accurate and reliable. However, it is the responsibility of the product user to determine the suitability of Thomson Micron products for a specific application. While defective products will be replaced without charge if promptly returned, no liability is assumed beyond such replacement. © 1998 Thomson Micron, LLC
* Trademark of Thomson Industries, Inc. THOMSON is registered in the U.S. Patent and Trademark Office and in other countries.

THOMSON MICRON™
Leading in Motion Control Technology
☎1-888-55-4-MOTION•FAX 516-467-9814•www.thomsonindustries.com

Notes:

THOMSON MICRON™
Leading in Motion Control Technology
☎1-888-55-4-MOTION•FAX 516-467-9814•www.thomsonindustries.com

The specifications and data in this publication are believed to be accurate and reliable. However, it is the responsibility of the product user to determine the suitability of Thomson Micron products for a specific application. While defective products will be replaced without charge if promptly returned, no liability is assumed beyond such replacement. © 1998 Thomson Micron, LLC
* Trademark of Thomson Industries, Inc. THOMSON is registered in the U.S. Patent and Trademark Office and in other countries.

AccuTRUE 90*
*TRUE PLANETARY** Gearhead

Ready for Immediate Delivery

Precision:	6 arc-minutes	**Ratio Availability**:	3:1 thru 100:1
Frame Sizes:	60, 75, 100, 142mm	**Radial load capacity**:	up to 5650 lb
Torque Capacity:	up to 16,514 in-lb	**Mounting system**:	AccuMount*

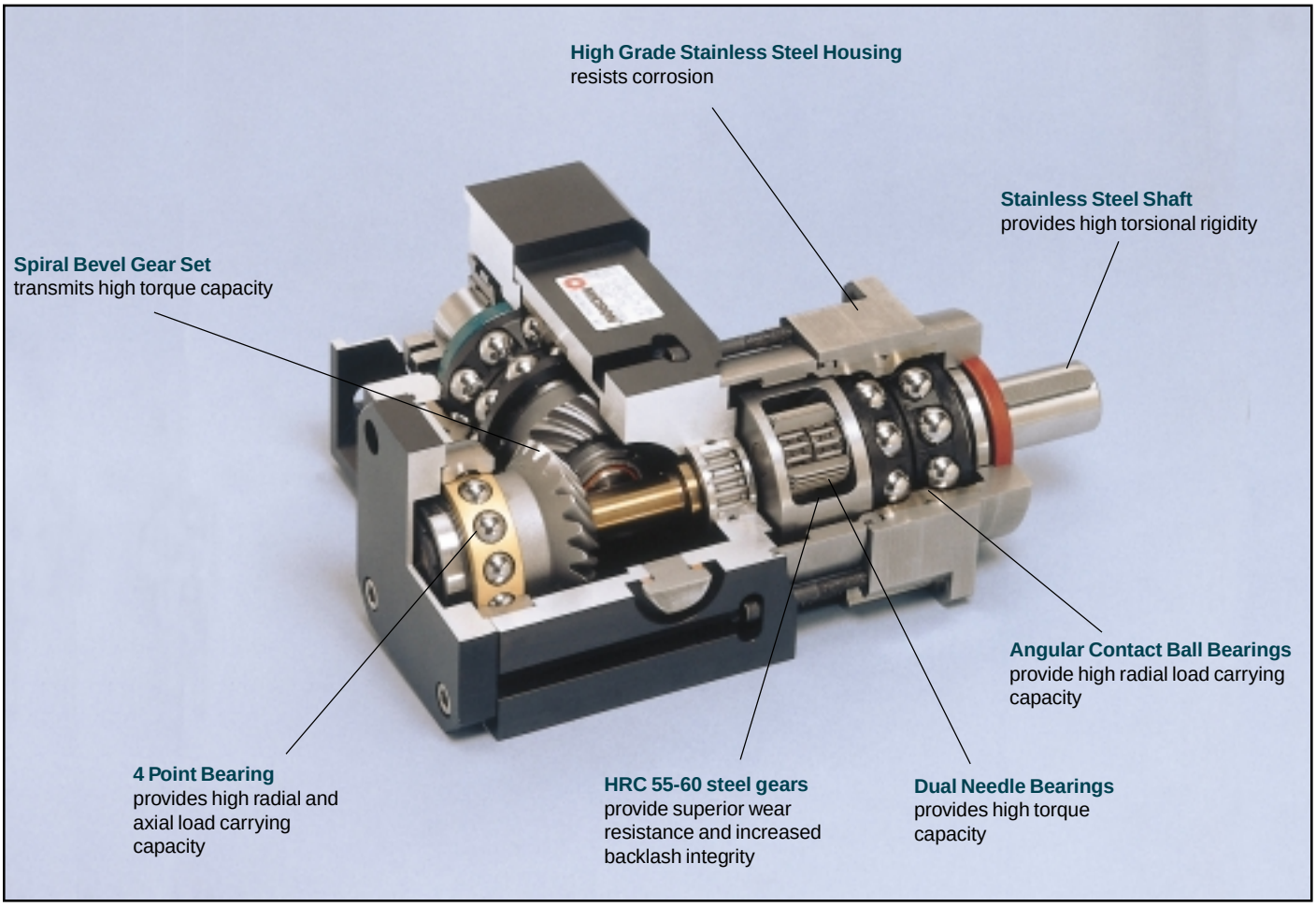

Index Page

AccuTRUE 90 Size 6 Planetary Gearhead.....ATR2
AccuTRUE 90 Size 7.5 Planetary Gearhead.....ATR3
AccuTRUE 90 Size 10 Planetary Gearhead.....ATR4
AccuTRUE 90 Size 14 Planetary Gearhead.....ATR5
Selection.....11
Mounting Tools.....80
Ordering.....Inside Back Cover
Free motor mounting book.....Call 1-888-55-4-Motion

The specifications and data in this publication are believed to be accurate and reliable. However, it is the responsibility of the product user to determine the suitability of Thomson Micron products for a specific application. While defective products will be replaced without charge if promptly returned, no liability is assumed beyond such replacement. © 1998 Thomson Micron, LLC
* Trademark of Thomson Industries, Inc. THOMSON is registered in the U.S. Patent and Trademark Office and in other countries.

THOMSON MICRON™
Leading in Motion Control Technology
☎1-888-55-4-MOTION•FAX 516-467-9814•www.thomsonindustries.com

AccuTRUE 90* Size 6
*TRUE PLANETARY** Gearhead

Metric

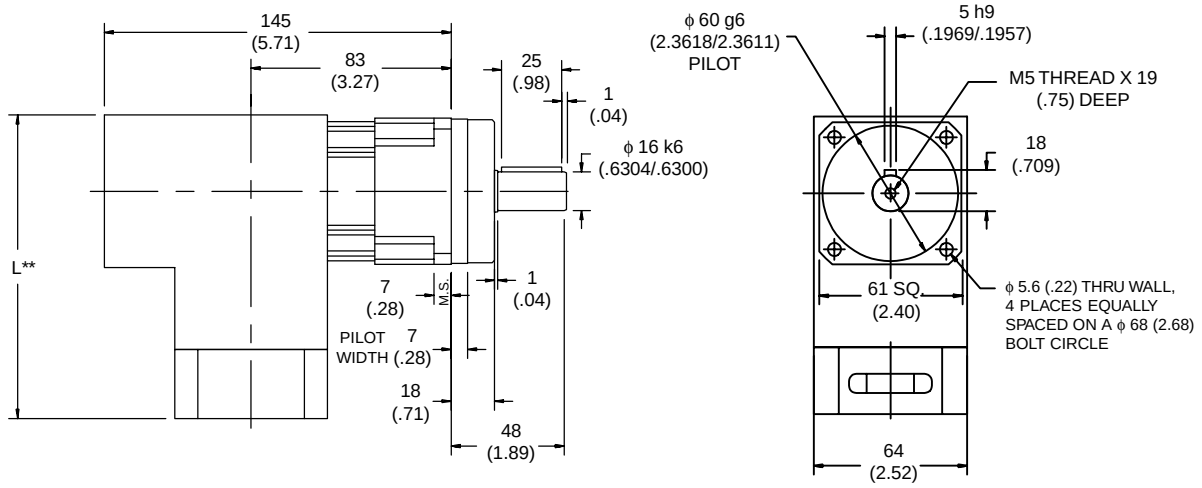

Ratio	Dimension 'L' mm *(in.)*	Backlash (arc-min) Super Precision	Backlash (arc-min) Ultra Precision	Weight kg *(lb)*	Efficiency
3:1 to 10:1	130 (5.12)	6 max	4 max	4 (8.8)	85%
16:1 to 100:1	153 (6.02)	7 max	5 max	4.5 (9.9)	80%

**Based on a motor shaft length of 25 (.98)
Length will vary depending on motor.
Call 1-888-55-4-MOTION for your free Motor Mounting Catalog.

All Dimensions are: mm (inches)

Figure ATR6

(TABLE 1) PERFORMANCE SPECIFICATIONS

Part Number	Ratio[1]	10,000 HOUR LIFE T_r (1000 rpm) Nm *(in-lb)*	T_r (3000 rpm) Nm *(in-lb)*	T_r (5000 rpm) Nm *(in-lb)*	T_{peak} Nm *(in-lb)*	J kg-cm² *(in-lb-sec²x10⁻³)*	Torsional Stiffness Nm/arc-min *(in-lb/arc-min)*
ATR006-003	3:1	31 *(274)*	23 *(204)*	19 *(168)*	71 *(628)*	1.5 *(1.3)*	1.6 (14)
ATR006-004	4:1	41 *(363)*	29 *(257)*	25 *(221)*	95 *(841)*	1.4 *(1.2)*	1.6 (14)
ATR006-005	5:1	44 *(389)*	35 *(310)*	30 *(266)*	115 *(1018)*	1.3 *(1.2)*	1.6 (14)
ATR006-007	7:1	42 *(372)*	33 *(292)*	28 *(248)*	106 *(938)*	1.3 *(1.2)*	1.6 (14)
ATR006-8.2	8.2:1	34 *(301)*	29 *(257)*	27 *(239)*	100 *(885)*	1.3 *(1.2)*	1.6 (14)
ATR006-010	10:1	20 *(177)*	17 *(150)*	16 *(142)*	103 *(912)*	1.3 *(1.2)*	1.6 (14)
ATR006-016	16:1	50 *(443)*	44 *(389)*	38 *(336)*	72 *(637)*	.19 *(.17)*	1.6 (14)
ATR006-020	20:1	47 *(416)*	45 *(398)*	44 *(389)*	90 *(797)*	.19 *(.17)*	1.6 (14)
ATR006-028	28:1	45 *(398)*	43 *(381)*	41 *(363)*	110 *(974)*	.19 *(.17)*	1.6 (14)
ATR006-040	40:1	52 *(460)*	50 *(443)*	48 *(425)*	72 *(637)*	.09 *(.08)*	1.6 (14)
ATR006-050	50:1	49 *(434)*	47 *(416)*	46 *(407)*	90 *(797)*	.09 *(.08)*	1.6 (14)
ATR006-070	70:1	47 *(416)*	45 *(398)*	44 *(389)*	110 *(974)*	.09 *(.08)*	1.6 (14)
ATR006-100	100:1	26 *(230)*	23 *(204)*	22 *(195)*	113 *(1000)*	.09 *(.08)*	1.6 (14)

[1] Ratios are exact, higher ratios are also available, consult factory.
T_r = Rated output torque at rated speed for specified hours of life.
J = Mass moment of inertia reflected to the input shaft (including pinion assembly).

For ordering information see inside back cover

See page 11 for gearhead selection criteria

(TABLE 2) RADIAL AND AXIAL LOAD RATINGS

This graph displays the allowable radial load at a given distance (X) from the mounting surface based on an L_{10} life of 10,000 hours for the mean output speed, n_{mout}.

ATR6 RADIAL LOADINGS

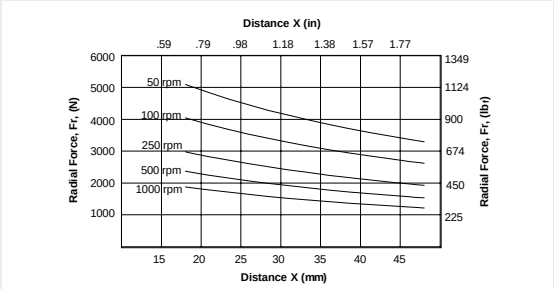

ATR6 AXIAL LOADINGS

Speed (rpm)	Axial Load, F_a N *(lb_f)*
50	6543*(1471)*
100	5191*(1167)*
250	3825 *(860)*
500	3038 *(683)*
1000	2411 *(542)*

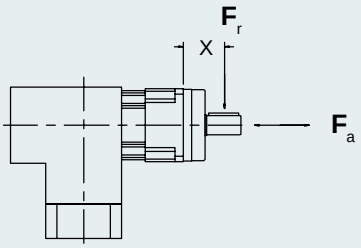

THOMSON MICRON™
Leading in Motion Control Technology
☎1-888-55-4-MOTION•FAX 516-467-9814•www.thomsonindustries.com

The specifications and data in this publication are believed to be accurate and reliable. However, it is the responsibility of the product user to determine the suitability of Thomson Micron products for a specific application. While defective products will be replaced without charge if promptly returned, no liability is assumed beyond such replacement. © 1998 Thomson Micron, LLC
* Trademark of Thomson Industries, Inc. THOMSON is registered in the U.S. Patent and Trademark Office and in other countries.

AccuTRUE 90* Size 7.5

*TRUE PLANETARY** Gearhead — Metric

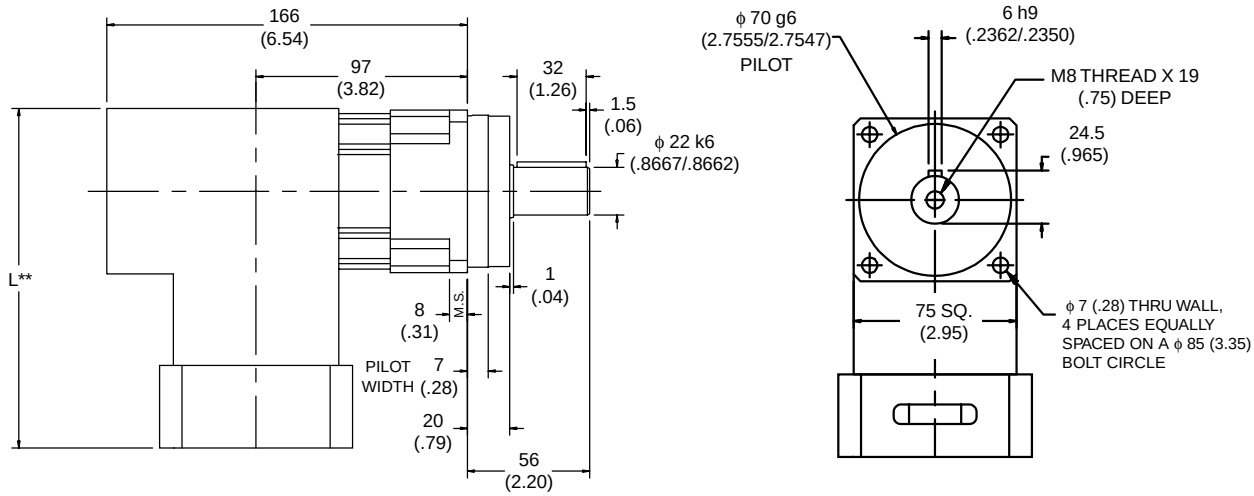

Ratio	Dimension 'L' mm *(in.)*	Backlash (arc-min) Super Precision	Backlash (arc-min) Ultra Precision	Weight kg *(lb)*	Efficiency
3:1 to 10:1	157 (6.18)	6 max	4 max	6 (13.2)	85%
16:1 to 100:1	189 (7.44)	7 max	5 max	6.5 (14.3)	80%

**Based on a motor shaft length of 30 (1.18)
Length will vary depending on motor.
Call 1-888-55-4-MOTION for your free Motor Mounting Catalog.

All Dimensions are: mm (inches)

Figure ATR7.5

(TABLE 1) PERFORMANCE SPECIFICATIONS

Part Number	Ratio[1]	10,000 HOUR LIFE T_r (1000 rpm) Nm *(in-lb)*	T_r (3000 rpm) Nm *(in-lb)*	T_r (5000 rpm) Nm *(in-lb)*	T_{peak} Nm *(in-lb)*	J kg-cm² *(in-lb-sec²x10⁻³)*	Torsional Stiffness Nm/arc-min *(in-lb/arc-min)*
ATR075-003	3:1	57 *(504)*	41 *(363)*	35 *(310)*	130 *(1151)*	3.6 *(3.2)*	4.3 (38)
ATR075-004	4:1	92 *(814)*	66 *(584)*	57 *(504)*	174 *(1540)*	3.4 *(3.0)*	4.3 (38)
ATR075-005	5:1	91 *(805)*	69 *(611)*	59 *(522)*	201 *(1779)*	3.3 *(2.9)*	4.3 (38)
ATR075-007	7:1	75 *(664)*	65 *(575)*	60 *(531)*	192 *(1699)*	3.2 *(2.8)*	4.3 (38)
ATR075-8.2	8.2:1	44 *(389)*	38 *(336)*	35 *(310)*	117 *(1035)*	3.2 *(2.8)*	4.3 (38)
ATR075-010	10:1	30 *(266)*	26 *(230)*	24 *(212)*	114 *(1009)*	3.2 *(2.8)*	4.3 (38)
ATR075-016	16:1	106 *(938)*	98 *(867)*	86 *(761)*	174 *(1540)*	.46 *(.41)*	4.3 (38)
ATR075-020	20:1	100 *(885)*	93 *(823)*	89 *(788)*	188 *(1664)*	.46 *(.41)*	4.3 (38)
ATR075-028	28:1	95 *(841)*	85 *(752)*	79 *(699)*	207 *(1832)*	.45 *(.40)*	4.3 (38)
ATR075-040	40:1	111 *(982)*	105 *(929)*	101 *(894)*	149 *(1319)*	.17 *(.15)*	4.3 (38)
ATR075-050	50:1	105 *(929)*	99 *(876)*	96 *(850)*	186 *(1646)*	.17 *(.15)*	4.3 (38)
ATR075-070	70:1	99 *(876)*	94 *(832)*	89 *(788)*	214 *(1894)*	.16 *(.14)*	4.3 (38)
ATR075-100	100:1	44 *(389)*	38 *(336)*	36 *(319)*	124 *(1097)*	.16 *(.14)*	4.3 (38)

[1] Ratios are exact, higher ratios are also available, consult factory.
T_r = Rated output torque at rated speed for specified hours of life.
J = Mass moment of inertia reflected to the input shaft (including pinion assembly).

For ordering information see inside back cover

See page 11 for gearhead selection criteria

(TABLE 2) RADIAL AND AXIAL LOAD RATINGS

This graph displays the allowable radial load at a given distance (X) from the mounting surface based on an L_{10} life of 10,000 hours for the mean output speed, n_{mout}.

ATR7.5 RADIAL LOADINGS

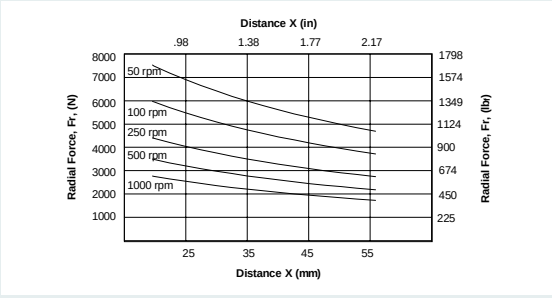

ATR7.5 AXIAL LOADINGS

Speed (rpm)	Axial Load, F_a N *(lb_f)*
50	9003 (2024)
100	7148 (1607)
250	5266 (1184)
500	4181 (940)
1000	3318 (746)

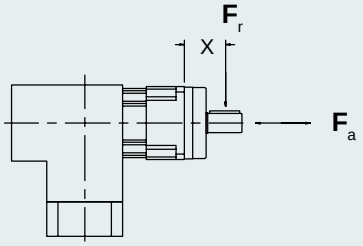

The specifications and data in this publication are believed to be accurate and reliable. However, it is the responsibility of the product user to determine the suitability of Thomson Micron products for a specific application. While defective products will be replaced without charge if promptly returned, no liability is assumed beyond such replacement. © 1998 Thomson Micron, LLC
* Trademark of Thomson Industries, Inc. THOMSON is registered in the U.S. Patent and Trademark Office and in other countries.

THOMSON MICRON™
Leading in Motion Control Technology
☎1-888-55-4-MOTION•FAX 516-467-9814•www.thomsonindustries.com

AccuTRUE 90* Size 10
*TRUE PLANETARY** Gearhead — Metric

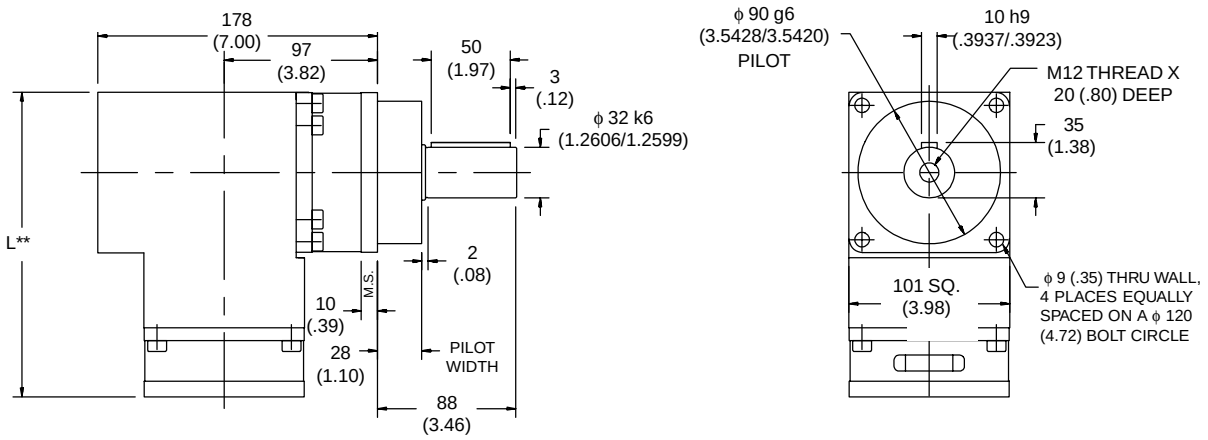

Ratio	Dimension 'L' mm *(in.)*	Backlash (arc-min)		Weight kg *(lb)*	Efficiency
		Super Precision	Ultra Precision		
3:1 to 10:1	193 (7.60)	6 max	4 max	12.5(27.5)	85%
16:1 to 100:1	243 (9.57)	7 max	5 max	13.5(29.7)	80%

**Based on a motor shaft length of 40 (1.57)
Length will vary depending on motor.
Call 1-888-55-4-MOTION for your free Motor Mounting Catalog.

All Dimensions are: mm (inches)

Figure ATR10

(TABLE 1) PERFORMANCE SPECIFICATIONS

Part Number	Ratio[1]	10,000 HOUR LIFE			T_{peak} Nm *(in-lb)*	J kg-cm² *(in-lb-sec²x10⁻³)*	Torsional Stiffness Nm/arc-min *(in-lb/arc-min)*
		T_r (1000 rpm) Nm *(in-lb)*	T_r (2000 rpm) Nm *(in-lb)*	T_r (3000 rpm) Nm *(in-lb)*			
ATR010-003	3:1	85 *(752)*	69 *(611)*	61 *(540)*	440 *(3894)*	11 *(9.7)*	15.8 (140)
ATR010-004	4:1	164 *(1451)*	143 *(1266)*	126 *(1115)*	383 *(3390)*	10 *(8.9)*	15.8 (140)
ATR010-005	5:1	185 *(1637)*	151 *(1336)*	133 *(1177)*	669 *(5921)*	10 *(8.9)*	15.8 (140)
ATR010-006	6:1	156 *(1381)*	147 *(1301)*	136 *(1204)*	360 *(3186)*	9.8 *(3.1)*	15.8 (140)
ATR010-008	8:1	173 *(1531)*	164 *(1451)*	155 *(1372)*	383 *(3390)*	3.3 *(2.9)*	15.8 (140)
ATR010-010	10:1	211 *(1867)*	185 *(1637)*	164 *(1451)*	669 *(5921)*	3.2 *(2.8)*	15.8 (140)
ATR010-012	12:1	164 *(1451)*	156 *(1381)*	151 *(1336)*	360 *(3186)*	3.2 *(2.8)*	15.8 (140)
ATR010-016	16:1	181 *(1602)*	173 *(1531)*	168 *(1487)*	417 *(3690)*	1.6 *(1.4)*	15.8 (140)
ATR010-020	20:1	281 *(2487)*	228 *(2018)*	202 *(1788)*	576 *(5098)*	1.6 *(1.4)*	15.8 (140)
ATR010-025	25:1	300 *(2655)*	244 *(2159)*	216 *(1912)*	576 *(5098)*	1.2 *(1.1)*	15.8 (140)
ATR010-030	30:1	172 *(1522)*	166 *(1469)*	162 *(1434)*	390 *(3452)*	1.2 *(1.1)*	15.8 (140)
ATR010-040	40:1	191 *(1690)*	184 *(1628)*	179 *(1584)*	431 *(3814)*	.80 *(.71)*	15.8 (140)
ATR010-050	50:1	269 *(2381)*	245 *(2168)*	232 *(2053)*	576 *(5098)*	.80 *(.71)*	15.8 (140)
ATR010-060	60:1	179 *(1584)*	172 *(1522)*	169 *(1496)*	398 *(3522)*	.80 *(.71)*	15.8 (140)
ATR010-080	80:1	114 *(1009)*	110 *(974)*	108 *(956)*	252 *(2230)*	.80 *(.71)*	15.8 (140)
ATR010-100	100:1	73 *(646)*	71 *(628)*	70 *(620)*	161 *(1425)*	.80 *(.71)*	15.8 (140)

[1] Ratios are exact, higher ratios are also available, consult factory.
T_r = Rated output torque at rated speed for specified hours of life.
J = Mass moment of inertia reflected to the input shaft (including pinion assembly).

For ordering information see inside back cover

See page 11 for gearhead selection criteria

(TABLE 2) RADIAL AND AXIAL LOAD RATINGS

This graph displays the allowable radial load at a given distance (X) from the mounting surface based on an L_{10} life of 10,000 hours for the mean output speed, n_{mout}.

ATR10 RADIAL LOADINGS

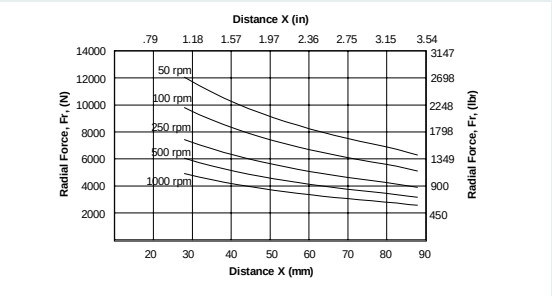

ATR10 AXIAL LOADINGS

Speed (rpm)	Axial Load, F_a N *(lb_f)*
50	12,432 *(2795)*
100	10,097 *(2270)*
250	7668 *(1724)*
500	6232 *(1401)*
1000	5062 *(1138)*

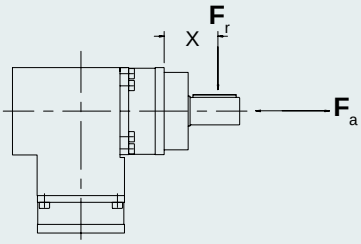

THOMSON MICRON™
Leading in Motion Control Technology
☎1-888-55-4-MOTION•FAX 516-467-9814•www.thomsonindustries.com

The specifications and data in this publication are believed to be accurate and reliable. However, it is the responsibility of the product user to determine the suitability of Thomson Micron products for a specific application. While defective products will be replaced without charge if promptly returned, no liability is assumed beyond such replacement. © 1998 Thomson Micron, LLC
* Trademark of Thomson Industries, Inc. THOMSON is registered in the U.S. Patent and Trademark Office and in other countries.

AccuTRUE 90* Size 14

*TRUE PLANETARY** Gearhead — Metric

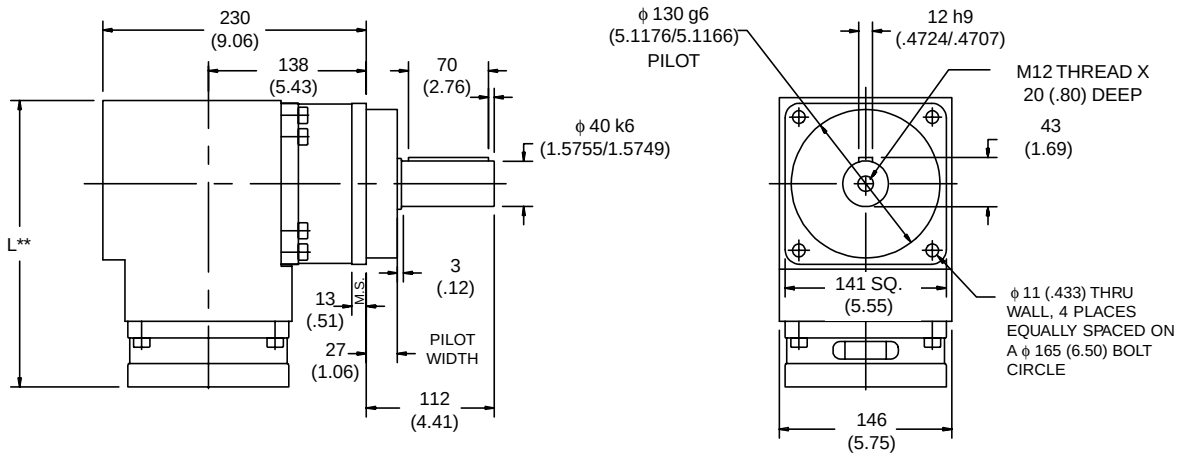

Ratio	Dimension 'L' mm *(in.)*	Backlash (arc-min) Super Precision	Backlash (arc-min) Ultra Precision	Weight kg *(lb)*	Efficiency
3:1 to 10:1	250 (9.84)	6 max	4 max	30 (66)	85%
16:1 to 100:1	325 (12.81)	7 max	5 max	35 (77)	80%

**Based on a motor shaft length of 50 (1.97)
Length will vary depending on motor.
Call 1-888-55-4-MOTION for your free Motor Mounting Catalog.

All Dimensions are: mm (inches)

Figure ATR14

(TABLE 1) PERFORMANCE SPECIFICATIONS

Part Number	Ratio[1]	10,000 HOUR LIFE T_r (1000 rpm) Nm *(in-lb)*	T_r (2000 rpm) Nm *(in-lb)*	T_r (3000 rpm) Nm *(in-lb)*	T_{peak} Nm *(in-lb)*	J kg-cm² *(in-lb-sec²x10⁻³)*	Torsional Stiffness Nm/arc-min *(in-lb/arc-min)*
ATR014-003	3:1	168 *(1487)*	137 *(1212)*	121 *(1071)*	1317 *(11655)*	30 *(27)*	30.6 (271)
ATR014-004	4:1	383 *(3390)*	311 *(2752)*	275 *(2434)*	1866 *(16514)*	25 *(22)*	30.6 (271)
ATR014-005	5:1	405 *(3584)*	329 *(2912)*	291 *(2575)*	1755 *(15532)*	23 *(20)*	30.6 (271)
ATR014-006	6:1	418 *(3699)*	340 *(3009)*	301 *(2664)*	1666 *(14744)*	22 *(19)*	30.6 (271)
ATR014-008	8:1	471 *(4168)*	383 *(3390)*	339 *(3000)*	1866 *(16514)*	10 *(8.9)*	30.6 (271)
ATR014-010	10:1	498 *(4407)*	405 *(3584)*	358 *(3168)*	1755 *(15532)*	10 *(8.9)*	30.6 (271)
ATR014-012	12:1	515 *(4558)*	418 *(3699)*	370 *(3275)*	1666 *(14744)*	10 *(8.9)*	30.6 (271)
ATR014-016	16:1	478 *(4230)*	464 *(4106)*	417 *(3690)*	1206 *(10673)*	5.5 *(4.9)*	30.6 (271)
ATR014-020	20:1	598 *(5292)*	498 *(4407)*	441 *(3903)*	1508 *(13346)*	5.5 *(4.9)*	30.6 (271)
ATR014-025	25:1	603 *(5337)*	533 *(4717)*	472 *(4177)*	1508 *(13346)*	4.3 *(3.8)*	30.6 (271)
ATR014-030	30:1	568 *(5027)*	544 *(4814)*	487 *(4310)*	1278 *(11310)*	4.3 *(3.8)*	30.6 (271)
ATR014-040	40:1	470 *(4160)*	445 *(3938)*	429 *(3797)*	1068 *(9452)*	2.8 *(2.5)*	30.6 (271)
ATR014-050	50:1	587 *(5195)*	556 *(4921)*	536 *(4744)*	1335 *(11815)*	2.8 *(2.5)*	30.6 (271)
ATR014-060	60:1	589 *(5213)*	568 *(5027)*	554 *(4903)*	1309 *(11585)*	2.8 *(2.5)*	30.6 (271)
ATR014-080	80:1	358 *(3168)*	329 *(2912)*	313 *(2770)*	1359 *(12027)*	2.8 *(2.5)*	30.6 (271)
ATR014-100	100:1	164 *(1451)*	158 *(1398)*	155 *(1372)*	358 *(3168)*	2.7 *(2.4)*	30.6 (271)

[1] Ratios are exact, higher ratios are also available, consult factory.
T_r = Rated output torque at rated speed for specified hours of life.
J = Mass moment of inertia reflected to the input shaft (including pinion assembly).

For ordering information see inside back cover

See page 11 for gearhead selection criteria

(TABLE 2) RADIAL AND AXIAL LOAD RATINGS

This graph displays the allowable radial load at a given distance (X) from the mounting surface based on an L_{10} life of 10,000 hours for the mean output speed, n_{mout}.

ATR14 RADIAL LOADINGS

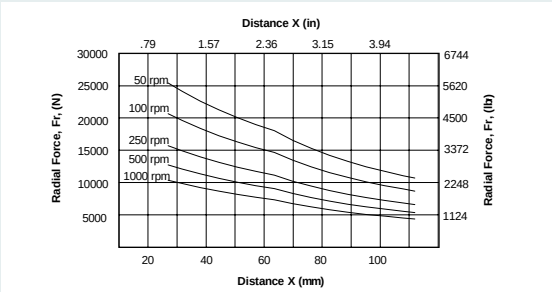

ATR14 AXIAL LOADINGS

Speed (rpm)	Axial Load, F_a N *(lb_f)*
50	23,067 *(5186)*
100	18,735 *(4212)*
250	14,234 *(3200)*
500	11,560 *(2599)*
1000	9,390 *(2111)*

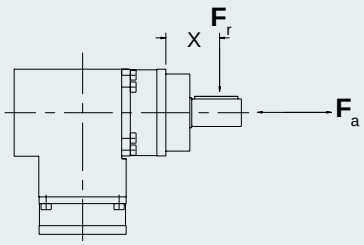

The specifications and data in this publication are believed to be accurate and reliable. However, it is the responsibility of the product user to determine the suitability of Thomson Micron products for a specific application. While defective products will be replaced without charge if promptly returned, no liability is assumed beyond such replacement. © 1998 Thomson Micron, LLC
* Trademark of Thomson Industries, Inc. THOMSON is registered in the U.S. Patent and Trademark Office and in other countries.

THOMSON MICRON™
Leading in Motion Control Technology
☎1-888-55-4-MOTION•FAX 516-467-9814•www.thomsonindustries.com

Notes:

THOMSON MICRON™
Leading in Motion Control Technology
☎1-888-55-4-MOTION•FAX 516-467-9814•www.thomsonindustries.com

The specifications and data in this publication are believed to be accurate and reliable. However, it is the responsibility of the product user to determine the suitability of Thomson Micron products for a specific application. While defective products will be replaced without charge if promptly returned, no liability is assumed beyond such replacement. © 1998 Thomson Micron, LLC
* Trademark of Thomson Industries, Inc. THOMSON is registered in the U.S. Patent and Trademark Office and in other countries.

UltraTRUE*
Helical True Planetary Gearheads*

Ready for Immediate Delivery

Precision: 4 arc-minutes
Frame Sizes: 60, 75, 100, 142, 180mm
Torque Capacity: up to 29,201in-lb
Ratio Availability: 4:1 thru 100:1
Radial load capacity: up to 8500 lb
Mounting system: RediMount*

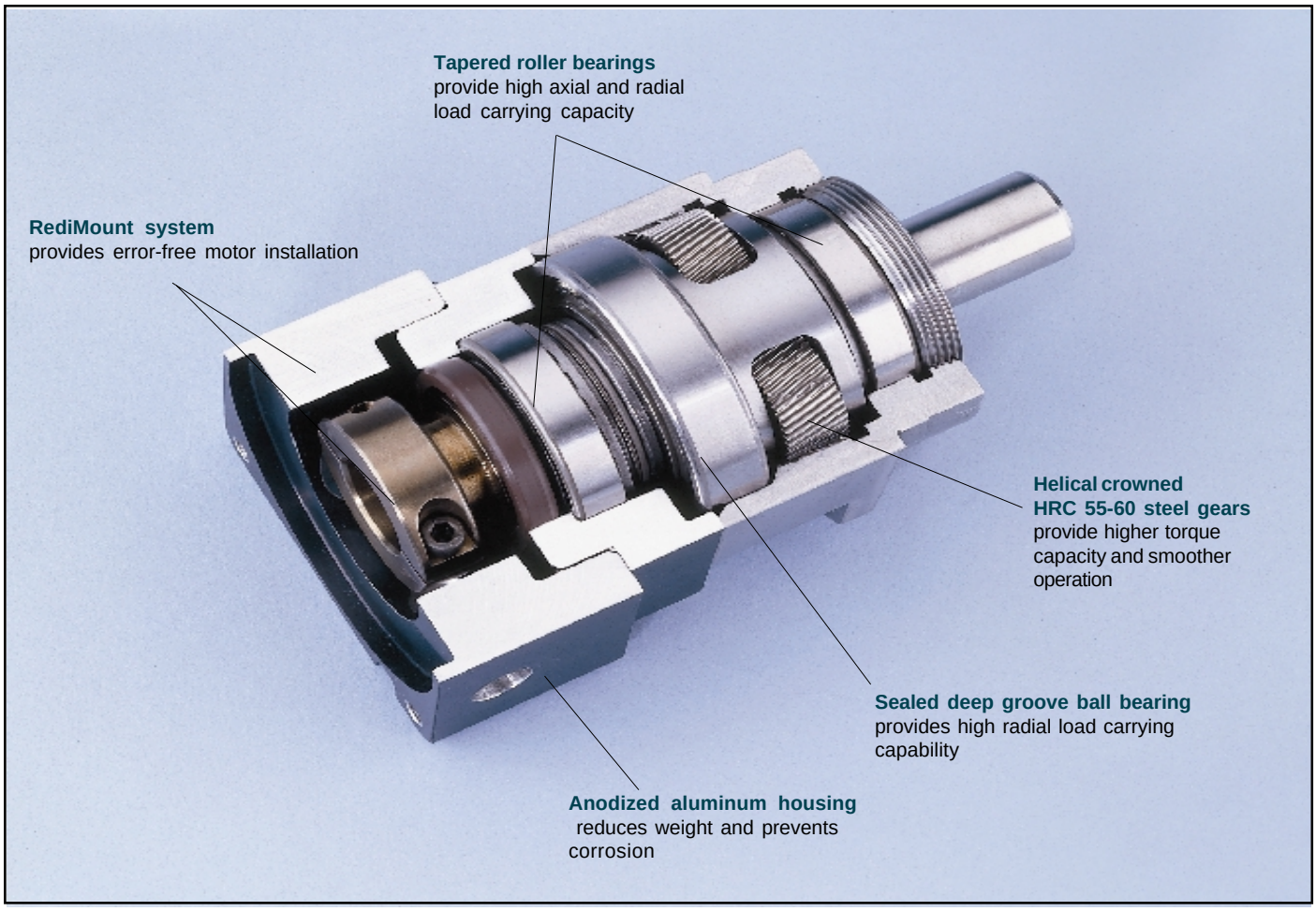

Index Page

UltraTRUE Size 6 Planetary Gearhead UT2
UltraTRUE Size 7.5 Planetary Gearhead UT3
UltraTRUE Size 10 Planetary Gearhead UT4
UltraTRUE Size 14 Planetary Gearhead UT5
UltraTRUE Size 18 Planetary Gearhead UT6
Selection 11
Mounting Tools 80
Ordering ..... Inside Back Cover
Free motor mounting book ..... Call 1-888-55-4-Motion

The specifications and data in this publication are believed to be accurate and reliable. However, it is the responsibility of the product user to determine the suitability of Thomson Micron products for a specific application. While defective products will be replaced without charge if promptly returned, no liability is assumed beyond such replacement. © 1998 Thomson Micron, LLC
* Trademark of Thomson Industries, Inc. THOMSON is registered in the U.S. Patent and Trademark Office and in other countries.

UltraTRUE * Size 6

Helical True Planetary Gearhead* Metric

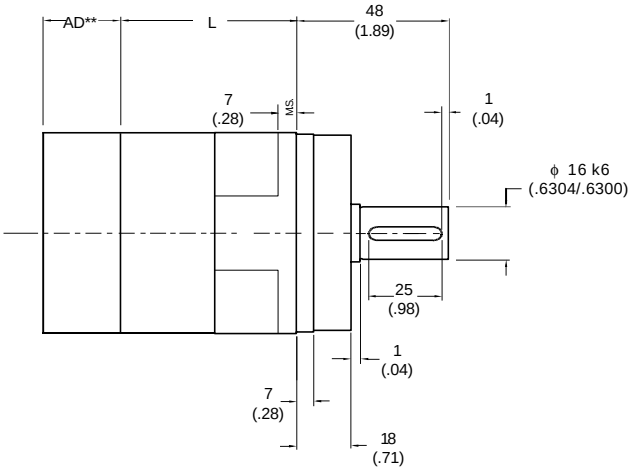

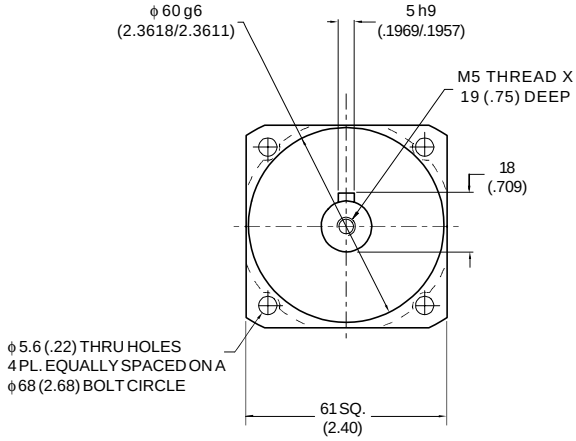

Ratio	Dimension 'L' mm *(in)*	Backlash (arc-min)	Weight Kg *(lb)*	Efficiency
4:1 to 10:1	57 *(2.25)*	4 max	2 *(4.4)*	92%
16:1 to 100:1	105.4 *(4.15)*	5 max	2.5 *(5.5)*	87%

** AD = Adapter length.
Adapter length will vary depending on motor.
Call 1-888-55-4-MOTION for your free Motor Mounting Catalog.

All Dimensions are: mm (inches)

(TABLE 1) PERFORMANCE SPECIFICATIONS

Part Number	Ratio[1]	5,000 HOUR LIFE			T_{peak}	10,000 HOUR LIFE			J	Torsional Stiffness
		T_r (1000 rpm) Nm *(in-lb)*	T_r (3000 rpm) Nm *(in-lb)*	T_r (5000 rpm) Nm *(in-lb)*	Nm *(in-lb)*	T_r (1000 rpm) Nm *(in-lb)*	T_r (3000 rpm) Nm *(in-lb)*	T_r (5000 rpm) Nm *(in-lb)*	kg-cm² *(in-lb-sec² x10 ⁻⁴)*	Nm/arc-min *(in-lb/arc-min)*
UT006-004	4:1	48 (426)	44 (387)	38 (340)	101 (891)	47 (417)	36 (322)	31 (276)	.20 (1.80)	2.62 (23.2)
UT006-005	5:1	47 (413)	43 (377)	40 (355)	98 (865)	46 (404)	38 (336)	33 (288)	.13 (1.16)	2.56 (22.7)
UT006-007	7:1	45 (394)	41 (362)	39 (345)	93 (825)	44 (385)	40 (354)	35 (307)	.11 (.96)	2.42 (21.5)
UT006-010	10:1	26 (232)	23 (200)	21 (186)	88 (781)	24 (215)	21 (185)	19 (173)	.10 (.85)	1.93 (17.1)
UT006-016	16:1	53 (467)	49 (435)	47 (419)	110 (975)	52 (456)	48 (426)	46 (410)	.16 (1.44)	2.67 (23.7)
UT006-020	20:1	53 (472)	50 (442)	48 (426)	111 (985)	52 (462)	49 (432)	47 (417)	.16 (1.44)	2.62 (23.2)
UT006-025	25:1	51 (456)	48 (428)	47 (413)	107 (948)	50 (446)	47 (418)	46 (404)	.16 (1.44)	2.58 (22.8)
UT006-028	28:1	54 (481)	51 (452)	49 (437)	113 (999)	53 (470)	50 (442)	48 (427)	.16 (1.44)	2.46 (21.8)
UT006-035	35:1	52 (463)	49 (437)	48 (423)	108 (960)	51 (453)	48 (427)	47 (414)	.10 (.85)	2.54 (22.5)
UT006-040	40:1	55 (489)	52 (462)	51 (447)	114 (1011)	54 (478)	51 (451)	49 (438)	.10 (.85)	2.67 (23.7)
UT006-050	50:1	53 (471)	50 (446)	49 (433)	110 (971)	52 (461)	49 (436)	48 (423)	.10 (.85)	2.62 (23.2)
UT006-070	70:1	50 (445)	48 (423)	46 (411)	103 (913)	49 (435)	47 (414)	45 (402)	.10 (.85)	2.46 (21.8)
UT006-100	100:1	35 (307)	30 (269)	29 (253)	96 (851)	32 (284)	28 (249)	26 (234)	.10 (.85)	2.03 (17.9)

[1] Ratios are exact, higher ratios are also available, consult factory.
T_r = Rated output torque at rated speed for specified hours of life.
J = Mass moment of inertia reflected to the input shaft (including pinion assembly).

For ordering information see inside back cover

See page 11 for gearhead selection criteria

(TABLE 2) RADIAL AND AXIAL LOAD RATINGS

These graphs display the allowable radial load at a given distance (X) from the mounting surface based on an L_{10} life of 10,000 hours for the mean output speed, n_{mout}, as described on page 11.

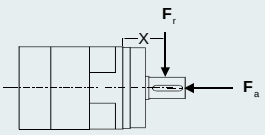

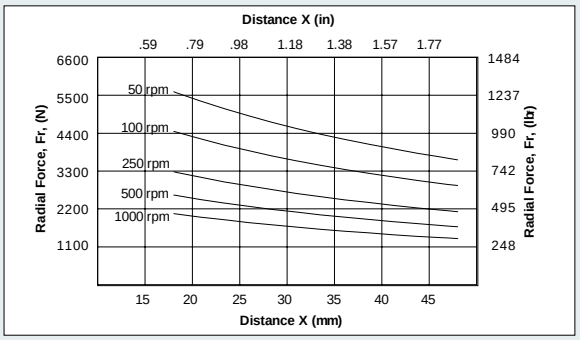

Speed (rpm)	Axial Load, F_a N *(lb_f)*
50	7198 *(1618)*
100	5710 *(1284)*
250	4208 *(946)*
500	3342 *(751)*
1000	2652 *(596)*

THOMSON MICRON™
Leading in Motion Control Technology
☎1-888-55-4-MOTION•FAX 516-467-9814•www.thomsonindustries.com

The specifications and data in this publication are believed to be accurate and reliable. However, it is the responsibility of the product user to determine the suitability of Thomson Micron products for a specific application. While defective products will be replaced without charge if promptly returned, no liability is assumed beyond such replacement. © 1998 Thomson Micron, LLC
* Trademark of Thomson Industries, Inc. THOMSON is registered in the U.S. Patent and Trademark Office and in other countries.

UltraTRUE* Size 7.5

Helical True Planetary Gearhead* — Metric

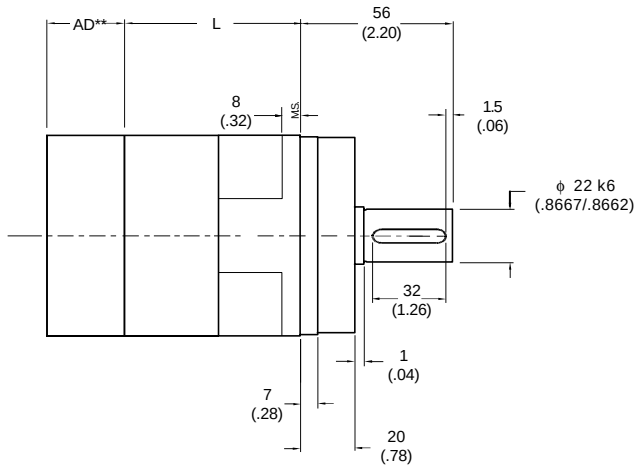

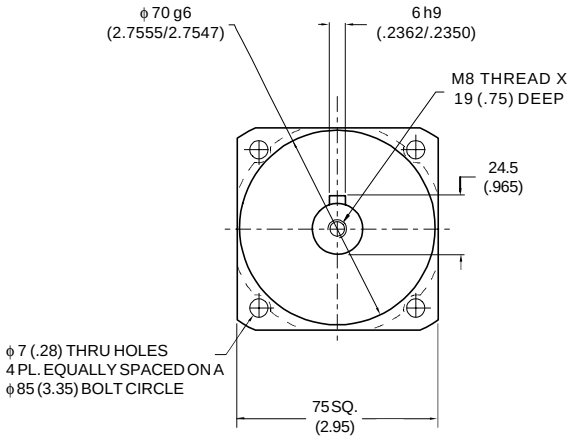

Ratio	Dimension 'L' mm *(in)*	Backlash (arc-min)	Weight Kg *(lb)*	Efficiency
4:1 to 10:1	60 *(2.35)*	4 max	2.5 *(5.5)*	92%
16:1 to 100:1	117 *(4.60)*	5 max	3.0 *(6.6)*	87%

** AD = Adapter length.
Adapter length will vary depending on motor.
Call 1-888-55-4-MOTION for your free Motor Mounting Catalog.

All Dimensions are: mm (inches)

(TABLE 1) PERFORMANCE SPECIFICATIONS

Part Number	Ratio[1]	5,000 HOUR LIFE			T_{peak}	10,000 HOUR LIFE			J	Torsional Stiffness
		T_r (1000 rpm) Nm *(in-lb)*	T_r (3000 rpm) Nm *(in-lb)*	T_r (5000 rpm) Nm *(in-lb)*	Nm *(in-lb)*	T_r (1000 rpm) Nm *(in-lb)*	T_r (3000 rpm) Nm *(in-lb)*	T_r (5000 rpm) Nm *(in-lb)*	kg-cm² *(in-lb-sec² x10⁻⁴)*	Nm/arc-min *(in-lb/arc-min)*
UT075-004	4:1	86 (762)	78 (689)	73 (649)	179 (1581)	84 (746)	74 (652)	63 (559)	.46 (4.1)	7.00 (61.9)
UT075-005	5:1	84 (740)	76 (672)	72 (636)	174 (1537)	82 (723)	74 (657)	66 (583)	.38 (3.4)	6.86 (60.7)
UT075-007	7:1	80 (706)	73 (646)	69 (615)	166 (1469)	78 (690)	71 (632)	68 (601)	.31 (2.8)	6.07 (53.7)
UT075-010	10:1	47 (418)	41 (360)	38 (335)	157 (1393)	44 (387)	38 (333)	35 (310)	.27 (2.4)	4.46 (39.5)
UT075-016	16:1	95 (838)	88 (780)	85 (749)	197 (1743)	93 (820)	86 (762)	83 (732)	.31 (2.8)	7.36 (65.1)
UT075-020	20:1	96 (849)	90 (792)	86 (762)	199 (1762)	94 (830)	88 (775)	84 (746)	.31 (2.8)	7.20 (63.7)
UT075-025	25:1	93 (820)	87 (767)	84 (740)	192 (1698)	91 (801)	85 (750)	82 (723)	.31 (2.8)	7.07 (62.6)
UT075-028	28:1	98 (864)	92 (811)	88 (782)	202 (1789)	96 (845)	90 (793)	86 (765)	.28 (2.5)	6.45 (57.1)
UT075-035	35:1	94 (834)	89 (784)	86 (758)	194 (1721)	92 (815)	87 (767)	84 (741)	.16 (1.4)	6.68 (59.1)
UT075-040	40:1	99 (880)	94 (829)	91 (802)	205 (1813)	97 (861)	92 (811)	89 (785)	.16 (1.4)	7.37 (65.2)
UT075-050	50:1	96 (849)	91 (801)	88 (777)	197 (1743)	94 (830)	89 (784)	86 (759)	.16 (1.4)	7.22 (63.9)
UT075-070	70:1	91 (802)	86 (760)	83 (738)	185 (1639)	89 (784)	84 (743)	82 (722)	.16 (1.4)	6.48 (57.3)
UT075-100	100:1	63 (554)	55 (486)	52 (456)	173 (1529)	58 (513)	51 (450)	48 (422)	.15 (1.3)	4.50 (39.8)

[1] Ratios are exact, higher ratios are also available, consult factory.
T_r = Rated output torque at rated speed for specified hours of life.
J = Mass moment of inertia reflected to the input shaft (including pinion assembly).

For ordering information see inside back cover

See page 11 for gearhead selection criteria

(TABLE 2) RADIAL AND AXIAL LOAD RATINGS

These graphs display the allowable radial load at a given distance (X) from the mounting surface based on an L_{10} life of 10,000 hours for the mean output speed, n_{mout}, as described on page 11.

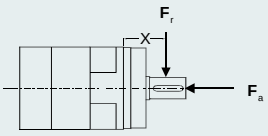

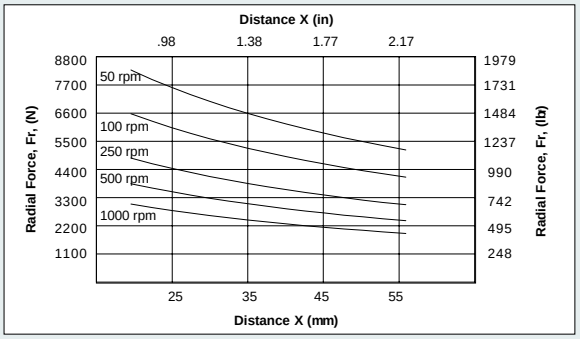

Speed (rpm)	Axial Load, F_a N *(lb_f)*
50	9903 (2227)
100	7863 (1768)
250	5793 (1303)
500	4599 (1034)
1000	3650 (821)

The specifications and data in this publication are believed to be accurate and reliable. However, it is the responsibility of the product user to determine the suitability of Thomson Micron products for a specific application. While defective products will be replaced without charge if promptly returned, no liability is assumed beyond such replacement. © 1998 Thomson Micron, LLC
* Trademark of Thomson Industries, Inc. THOMSON is registered in the U.S. Patent and Trademark Office and in other countries.

UltraTRUE * Size 10

Helical True Planetary Gearhead* Metric

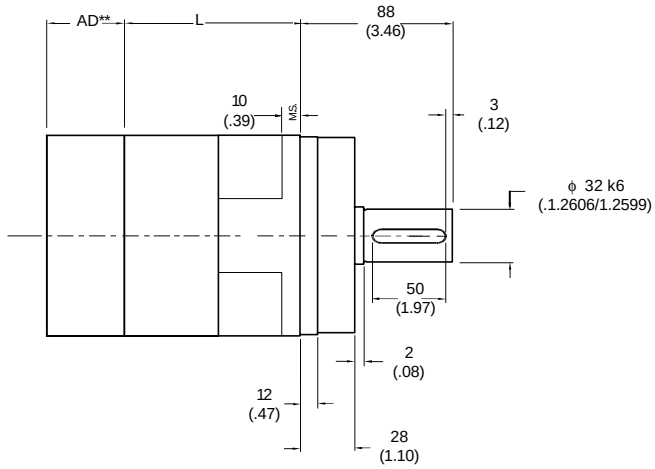

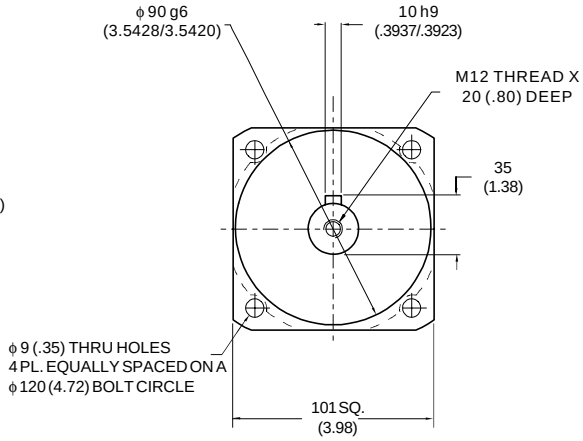

Ratio	Dimension 'L' mm *(in)*	Backlash (arc-min)	Weight Kg *(lb)*	Efficiency
4:1 to 10:1	78 *(3.07)*	4 max	6 *(13)*	92%
16:1 to 100:1	146 *(5.75)*	5 max	8 *(18)*	87%

** AD = Adapter length.
Adapter length will vary depending on motor.
Call 1-888-55-4-MOTION for your free Motor Mounting Catalog.

All Dimensions are: mm (inches)

(TABLE 1) PERFORMANCE SPECIFICATIONS

Part Number	Ratio[1]	5,000 HOUR LIFE			T_{peak}	10,000 HOUR LIFE			J kg-cm² *(in-lb-sec² x10 -4)*	Torsional Stiffness Nm/arc-min *(in-lb/arc-min)*
		T_r (1000 rpm) Nm *(in-lb)*	T_r (3000 rpm) Nm *(in-lb)*	T_r (5000 rpm) Nm *(in-lb)*	Nm *(in-lb)*	T_r (1000 rpm) Nm *(in-lb)*	T_r (3000 rpm) Nm *(in-lb)*	T_r (5000 rpm) Nm *(in-lb)*		
UT010-004	4:1	252 (2229)	217 (1922)	186 (1649)	514 (4548)	245 (2171)	176 (1561)	151 (1340)	1.58 (14.0)	25.7 (227)
UT010-005	5:1	245 (2168)	220 (1950)	194 (1720)	501 (4434)	240 (2120)	184 (1628)	158 (1397)	1.36 (12.0)	22.8 (202)
UT010-007	7:1	234 (2074)	213 (1882)	201 (1780)	481 (4256)	229 (2028)	196 (1736)	168 (1489)	.97 (8.6)	21.1 (187)
UT010-010	10:1	138 (1220)	118 (1048)	110 (971)	457 (4044)	128 (1129)	110 (969)	102 (898)	.90 (8.0)	14.4 (128)
UT010-016	16:1	279 (2471)	258 (2284)	247 (2184)	575 (5085)	273 (2416)	252 (2233)	229 (2030)	1.10 (9.7)	27.3 (242)
UT010-020	20:1	283 (2505)	263 (2325)	252 (2229)	582 (5152)	277 (2450)	257 (2273)	245 (2171)	1.10 (9.7)	24.3 (215)
UT010-025	25:1	274 (2422)	255 (2256)	245 (2168)	562 (4974)	268 (2368)	249 (2206)	240 (2120)	1.10 (9.7)	24.3 (215)
UT010-028	28:1	289 (2554)	269 (2384)	259 (2293)	592 (5242)	282 (2498)	263 (2331)	253 (2242)	.94 (8.3)	21.1 (187)
UT010-035	35:1	279 (2468)	261 (2310)	252 (2227)	571 (5054)	273 (2413)	255 (2259)	246 (2177)	.79 (7.0)	20.9 (185)
UT010-040	40:1	294 (2604)	276 (2442)	266 (2357)	602 (5327)	288 (2546)	270 (2388)	260 (2305)	.79 (7.0)	27.4 (243)
UT010-050	50:1	284 (2514)	267 (2364)	258 (2286)	579 (5128)	278 (2458)	261 (2312)	253 (2235)	.78 (6.9)	24.1 (213)
UT010-070	70:1	269 (2380)	254 (2246)	246 (2177)	546 (4832)	263 (2327)	248 (2197)	241 (2129)	.78 (6.9)	21.1 (187)
UT010-100	100:1	184 (1626)	161 (1423)	151 (1335)	510 (4510)	170 (1504)	149 (1317)	140 (1235)	.78 (6.9)	17.2 (152)

[1] Ratios are exact, higher ratios are also available, consult factory.
T_r = Rated output torque at rated speed for specified hours of life.
J = Mass moment of inertia reflected to the input shaft (including pinion assembly).

For ordering information see inside back cover

See page 11 for gearhead selection criteria

(TABLE 2) RADIAL AND AXIAL LOAD RATINGS

These graphs display the allowable radial load at a given distance (X) from the mounting surface based on an L_{10} life of 10,000 hours for the mean output speed, n_{mout}, as described on page 11.

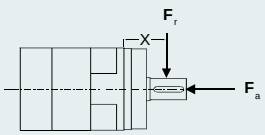

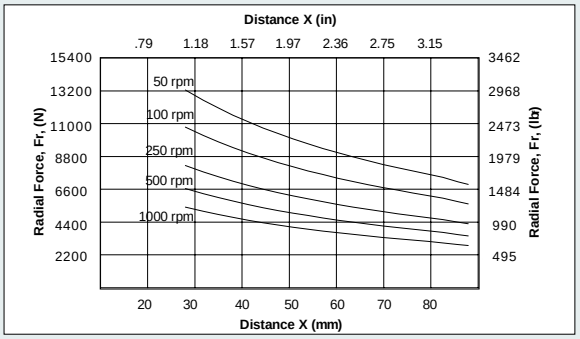

Speed (rpm)	Axial Load, F_a N *(lb_f)*
50	13,675 (3075)
100	11,107 (2497)
250	8435 (1897)
500	6855 (1542)
1000	5568 (1252)

THOMSON MICRON™
Leading in Motion Control Technology
☎1-888-55-4-MOTION•FAX 516-467-9814•www.thomsonindustries.com

The specifications and data in this publication are believed to be accurate and reliable. However, it is the responsibility of the product user to determine the suitability of Thomson Micron products for a specific application. While defective products will be replaced without charge if promptly returned, no liability is assumed beyond such replacement. © 1998 Thomson Micron, LLC
* Trademark of Thomson Industries, Inc. THOMSON is registered in the U.S. Patent and Trademark Office and in other countries.

UltraTRUE * Size 14

Helical True Planetary Gearhead* Metric

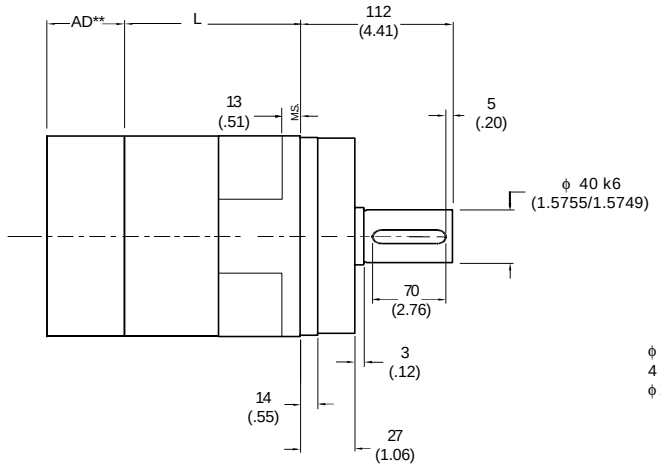

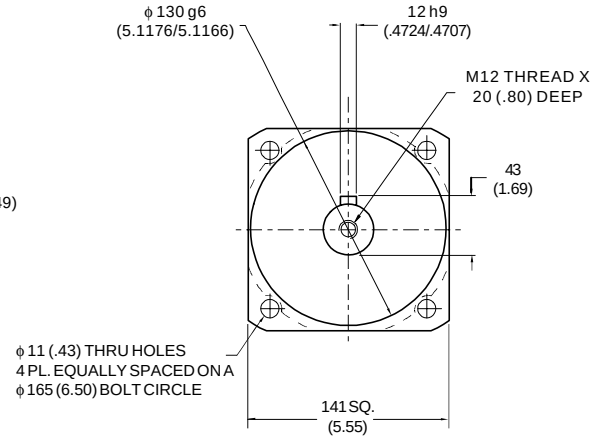

Ratio	Dimension 'L' mm *(in)*	Backlash (arc-min)	Weight Kg *(lb)*	Efficiency
4:1 to 10:1	110.5 *(4.35)*	4 max	14 *(31)*	92%
16:1 to 100:1	195 *(7.69)*	5 max	18 *(40)*	87%

** AD = Adapter length.
Adapter length will vary depending on motor.
Call 1-888-55-4-MOTION for your free Motor Mounting Catalog.

All Dimensions are: mm (inches)

(TABLE 1) PERFORMANCE SPECIFICATIONS

Part Number	Ratio[1]	5,000 HOUR LIFE				10,000 HOUR LIFE			J	Torsional Stiffness
		T_r (1000 rpm) Nm *(in-lb)*	T_r (3000 rpm) Nm *(in-lb)*	T_r (5000 rpm) Nm *(in-lb)*	T_{peak} Nm *(in-lb)*	T_r (1000 rpm) Nm *(in-lb)*	T_r (3000 rpm) Nm *(in-lb)*	T_r (5000 rpm) Nm *(in-lb)*	kg-cm² *(in-lb-sec² x10 -4)*	Nm/arc-min *(in-lb/arc-min)*
UT014-004	4:1	588 (5207)	521 (4613)	454 (4022)	1184 (10,479)	575 (5092)	430 (3808)	369 (3267)	6.51 (57.6)	55 (487)
UT014-005	5:1	572 (5066)	511 (4519)	474 (4191)	1156 (10,229)	560 (4954)	448 (3968)	385 (3404)	5.02 (44.4)	51 (452)
UT014-007	7:1	549 (4857)	494 (4375)	466 (4120)	1113 (9851)	537 (4749)	478 (4232)	410 (3631)	3.80 (33.6)	47 (420)
UT014-010	10:1	329 (2913)	282 (2492)	260 (2304)	1062 (9399)	305 (2696)	261 (2306)	241 (2132)	3.39 (30.0)	35 (311)
UT014-016	16:1	657 (5817)	604 (5346)	576 (5095)	1340 (11,860)	643 (5688)	591 (5227)	559 (4951)	4.21 (37.2)	58 (514)
UT014-020	20:1	667 (5902)	616 (5449)	588 (5207)	1360 (12,035)	652 (5772)	602 (5328)	575 (5092)	4.07 (36.0)	54 (479)
UT014-025	25:1	645 (5706)	598 (5288)	572 (5066)	1314 (11,625)	630 (5579)	584 (5171)	560 (4954)	4.07 (36.0)	54 (479)
UT014-028	28:1	681 (6026)	632 (5597)	607 (5369)	1387 (12,274)	666 (5892)	618 (5473)	593 (5250)	3.53 (31.2)	47 (417)
UT014-035	35:1	658 (5820)	613 (5424)	589 (5215)	1338 (11,837)	643 (5691)	599 (5304)	576 (5099)	2.99 (26.4)	44 (391)
UT014-040	40:1	695 (6150)	649 (5745)	625 (5530)	1412 (12,498)	680 (6014)	635 (5617)	611 (5408)	2.99 (26.4)	58 (512)
UT014-050	50:1	671 (5935)	628 (5560)	606 (5363)	1360 (12,034)	656 (5803)	614 (5437)	593 (5244)	2.85 (25.2)	54 (479)
UT014-070	70:1	635 (5623)	598 (5291)	578 (5118)	1283 (11,359)	621 (5499)	585 (5174)	565 (5004)	2.85 (25.2)	49 (435)
UT014-100	100:1	441 (3898)	385 (3407)	361 (3193)	1201 (10,627)	408 (3607)	356 (3153)	334 (2954)	2.85 (25.2)	35 (312)

[1] Ratios are exact, higher ratios are also available, consult factory.
T_r = Rated output torque at rated speed for specified hours of life.
J = Mass moment of inertia reflected to the input shaft (including pinion assembly).

For ordering information see inside back cover

See page 11 for gearhead selection criteria

(TABLE 2) RADIAL AND AXIAL LOAD RATINGS

These graphs display the allowable radial load at a given distance (X) from the mounting surface based on an L_{10} life of 10,000 hours for the mean output speed, n_{mout}, as described on page 11.

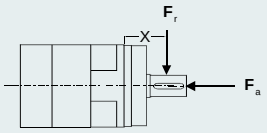

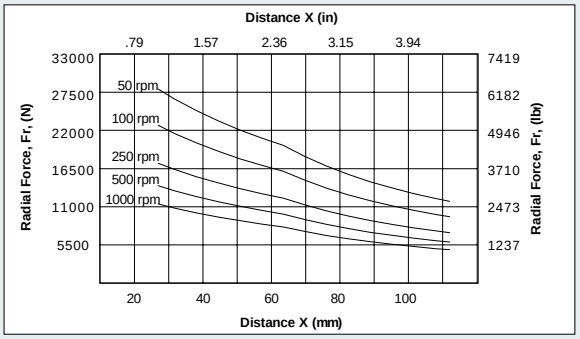

Speed (rpm)	Axial Load, F_a N *(lb_f)*
50	25,374 (5705)
100	20,609 (4633)
250	15,657 (3520)
500	12,716 (2859)
1000	10,329 (2322)

The specifications and data in this publication are believed to be accurate and reliable. However, it is the responsibility of the product user to determine the suitability of Thomson Micron products for a specific application. While defective products will be replaced without charge if promptly returned, no liability is assumed beyond such replacement. © 1998 Thomson Micron, LLC
* Trademark of Thomson Industries, Inc. THOMSON is registered in the U.S. Patent and Trademark Office and in other countries.

UltraTRUE * Size 18

Helical True Planetary Gearhead* Metric

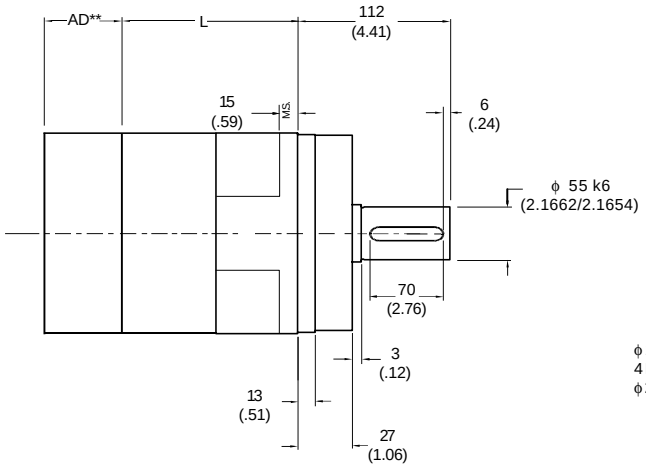

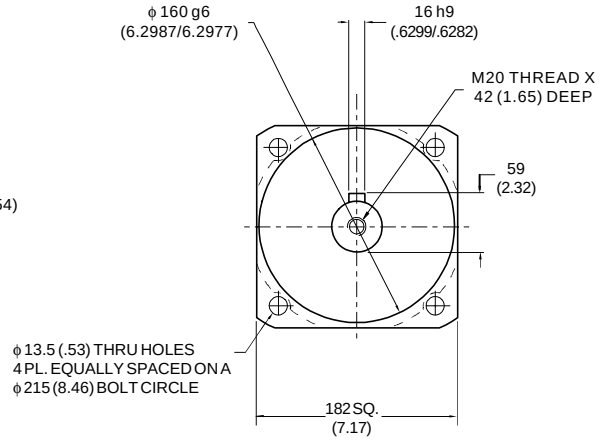

Ratio	Dimension 'L' mm *(in)*	Backlash (arc-min)	Weight Kg *(lb)*	Efficiency
4:1 to 10:1	136 *(5.35)*	4 max	40 *(88)*	92%
16:1 to 100:1	244 *(9.59)*	5 max	45 *(99)*	87%

** AD = Adapter length.
Adapter length will vary depending on motor.
Call 1-888-55-4-MOTION for your free Motor Mounting Catalog.

All Dimensions are: mm (inches)

(TABLE 1) PERFORMANCE SPECIFICATIONS

Part Number	Ratio[1]	5,000 HOUR LIFE			T_{peak}	10,000 HOUR LIFE			J kg-cm² *(in-lb-sec² x10 -4)*	Torsional Stiffness Nm/arc-min *(in-lb/arc-min)*
		T_r (1000 rpm) Nm *(in-lb)*	T_r (3000 rpm) Nm *(in-lb)*	T_r (5000 rpm) Nm *(in-lb)*	Nm *(in-lb)*	T_r (1000 rpm) Nm *(in-lb)*	T_r (3000 rpm) Nm *(in-lb)*	T_r (5000 rpm) Nm *(in-lb)*		
UT018-004	4:1	1368 (12108)	1184 (10476)	1016 (8988)	2713 (24010)	1337 (11832)	962 (8509)	825 (7300)	25.9 (229)	153 (1,358)
UT018-005	5:1	1333 (11800)	1179 (10430)	1058 (9366)	2654 (23492)	1304 (11539)	1002 (8868)	860 (7608)	20.0 (177)	150 (1,330)
UT018-007	7:1	1281 (11338)	1144 (10128)	1073 (9494)	2565 (22699)	1253 (11087)	1069 (9458)	917 (8114)	14.6 (129)	134 (1,185)
UT018-010	10:1	775 (6856)	660 (5841)	609 (5387)	2456 (21734)	717 (6344)	611 (5404)	563 (4984)	13.0 (115)	101 (893)
UT018-016	16:1	1541 (13641)	1408 (12457)	1336 (11827)	3111 (27532)	1507 (13339)	1376 (12181)	1250 (11065)	16.1 (142)	161 (1,429)
UT018-020	20:1	1566 (13855)	1437 (12716)	1368 (12108)	3162 (27986)	1531 (13549)	1405 (12434)	1337 (11832)	15.6 (138)	156 (1,382)
UT018-025	25:1	1515 (13407)	1396 (12359)	1333 (11800)	3060 (27078)	1481 (13110)	1366 (12085)	1304 (11539)	15.6 (138)	131 (1,160)
UT018-028	28:1	1600 (14164)	1479 (13088)	1414 (12515)	3233 (28612)	1565 (13851)	1446 (12798)	1383 (12237)	13.5 (119)	138 (1,225)
UT018-035	35:1	1547 (13691)	1435 (12701)	1376 (12174)	3122 (27633)	1513 (13388)	1403 (12420)	1345 (11904)	11.4 (101)	124 (1,098)
UT018-040	40:1	1636 (14475)	1521 (13460)	1460 (12920)	3300 (29201)	1599 (14154)	1487 (13162)	1428 (12634)	11.4 (101)	161 (1,429)
UT018-050	50:1	1579 (13978)	1474 (13042)	1418 (12547)	3181 (28153)	1544 (13668)	1441 (12754)	1386 (12269)	10.9 (96)	156 (1,382)
UT018-070	70:1	1498 (13256)	1404 (12429)	1355 (11993)	3008 (26621)	1465 (12963)	1373 (12154)	1325 (11728)	10.9 (96)	138 (1,225)
UT018-100	100:1	1042 (9218)	909 (8043)	851 (7528)	2819 (24949)	964 (8529)	841 (7442)	787 (6966)	10.9 (96)	103 (908)

[1] Ratios are exact, higher ratios are also available, consult factory.
T_r = Rated output torque at rated speed for specified hours of life.
J = Mass moment of inertia reflected to the input shaft (including pinion assembly).

For ordering information see inside back cover

See page 11 for gearhead selection criteria

(TABLE 2) RADIAL AND AXIAL LOAD RATINGS

These graphs display the allowable radial load at a given distance (X) from the mounting surface based on an L_{10} life of 10,000 hours for the mean output speed, n_{mout}, as described on page 11.

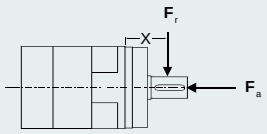

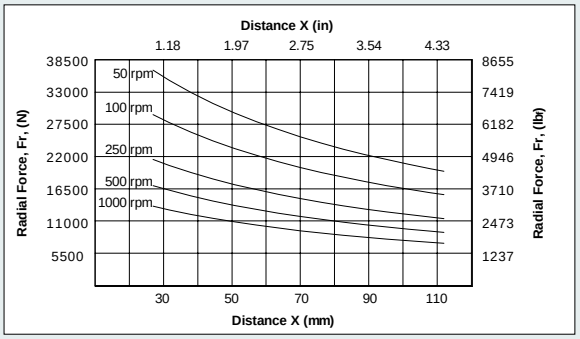

Speed (rpm)	Axial Load, F_a N *(lb_f)*
50	34,538 (7765)
100	27,414 (6163)
250	20,197 (4541)
500	16,034 (3605)
1000	12,726 (2861)

THOMSON MICRON™
Leading in Motion Control Technology
☎1-888-55-4-MOTION•FAX 516-467-9814•www.thomsonindustries.com

The specifications and data in this publication are believed to be accurate and reliable. However, it is the responsibility of the product user to determine the suitability of Thomson Micron products for a specific application. While defective products will be replaced without charge if promptly returned, no liability is assumed beyond such replacement. © 1998 Thomson Micron, LLC
* Trademark of Thomson Industries, Inc. THOMSON is registered in the U.S. Patent and Trademark Office and in other countries.

UltraTRUE 90*
Helical Right Angle Gearheads

Ready for Immediate Delivery

Precision: 4 arc-minutes
Frame Sizes: 60, 75, 100, 142, 180mm
Torque Capacity: up to 27,532 in-lb
Ratio Availability: 1:1 thru 50:1
Radial load capacity: up to 8500 lb
Mounting System: RediMount*

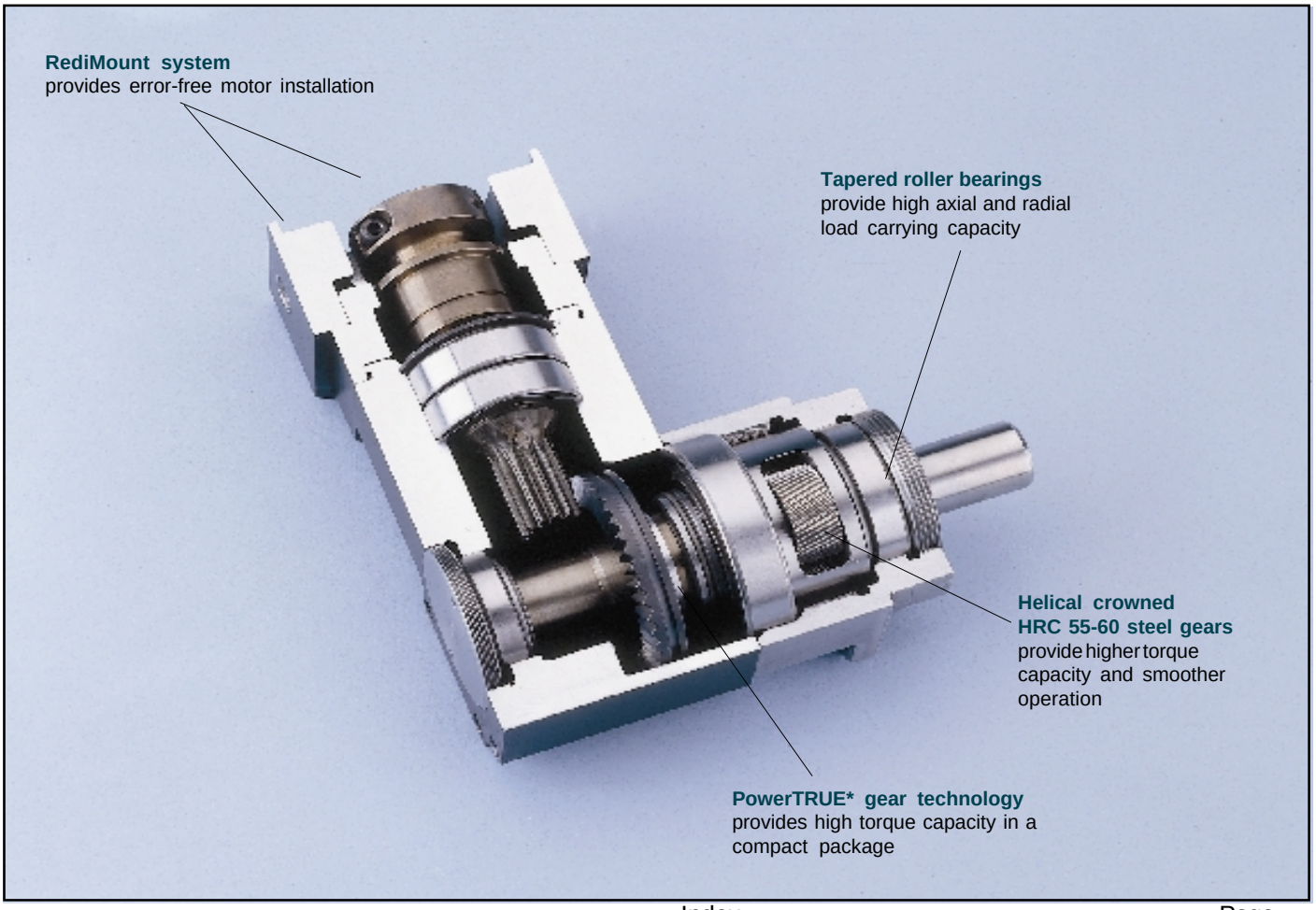

Index Page

UltraTRUE 90 Size 6 Planetary Gearhead.....UTR2
UltraTRUE 90 Size 7.5 Planetary Gearhead.....UTR3
UltraTRUE 90 Size 10 Planetary Gearhead.....UTR4
UltraTRUE 90 Size 14 Planetary Gearhead.....UTR5
UltraTRUE 90 Size 18 Planetary Gearhead.....UTR6
Selection.....11
Mounting Tools.....80
Ordering.....Inside Back Cover
Free motor mounting book.....Call 1-888-55-4-Motion

The specifications and data in this publication are believed to be accurate and reliable. However, it is the responsibility of the product user to determine the suitability of Thomson Micron products for a specific application. While defective products will be replaced without charge if promptly returned, no liability is assumed beyond such replacement. © 1998 Thomson Micron, LLC
* Trademark of Thomson Industries, Inc. THOMSON is registered in the U.S. Patent and Trademark Office and in other countries.

UltraTRUE 90* Size 6
Helical Right Angle Gearhead Metric

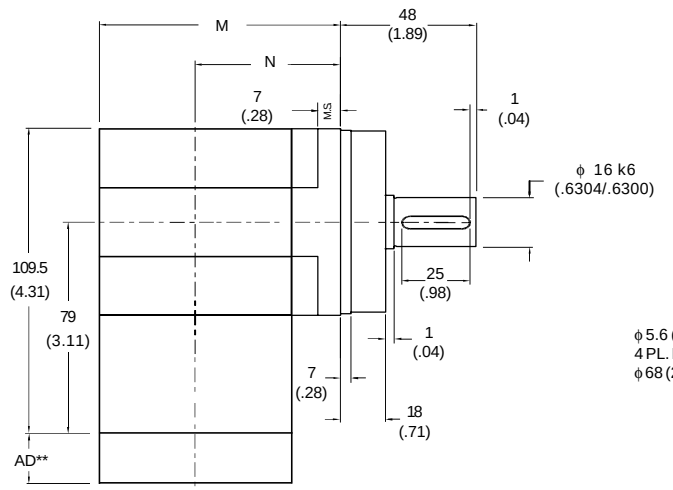

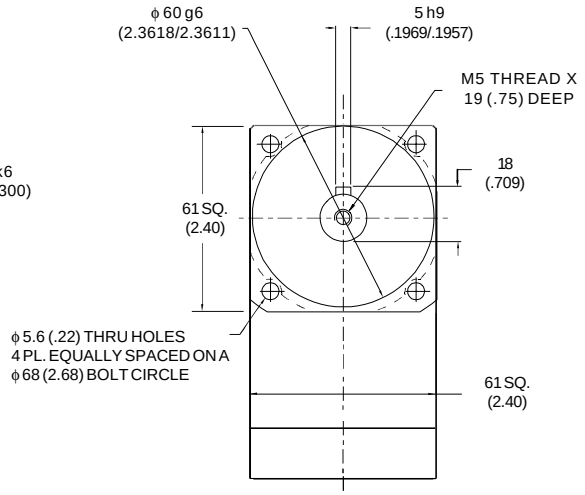

Ratio	Dimension 'M' mm *(in)*	Dimension 'N' mm *(in)*	Backlash (arc-min)	Weight Kg *(lb)*	Efficiency
1:1 to 5:1	86 *(3.38)*	55 *(2.18)*	4 max	2.5 *(5.5)*	95%
8:1 to 50:1	95 *(3.75)*	65 *(2.55)*	5 max	3 *(6.6)*	90%

** AD = Adapter length.
Adapter length will vary depending on motor.
Call 1-888-55-4-MOTION for your free Motor Mounting Catalog.

All Dimensions are: mm (inches)

(TABLE 1) PERFORMANCE SPECIFICATIONS

Part Number	Ratio[1]	5,000 HOUR LIFE			T_{peak}	10,000 HOUR LIFE			J	Torsional Stiffness
		T_r (1000 rpm) Nm *(in-lb)*	T_r (3000 rpm) Nm *(in-lb)*	T_r (5000 rpm) Nm *(in-lb)*	Nm *(in-lb)*	T_r (1000 rpm) Nm *(in-lb)*	T_r (3000 rpm) Nm *(in-lb)*	T_r (5000 rpm) Nm *(in-lb)*	kg-cm² *(in-lb-sec² x10 -4)*	Nm/arc-min *(in-lb/arc-min)*
UTR006-001	1:1	9 (77)	8 (70)	7 (64)	28 (247)	8 (71)	7 (65)	7 (59)	.97 (8.4)	2.1 (19)
UTR006-002	2:1	19 (170)	17 (155)	16 (140)	52 (456)	18 (157)	16 (143)	15 (129)	.50 (4.3)	3.2 (29)
UTR006-003	3:1	12 (108)	11 (99)	10 (89)	39 (342)	11 (100)	10 (91)	9 (82)	.43 (3.7)	3.6 (32)
UTR006-004	4:1	9 (80)	8 (73)	7 (66)	34 (301)	8 (73)	8 (67)	7 (61)	.40 (3.4)	3.8 (34)
UTR006-005	5:1	7 (65)	7 (60)	6 (54)	26 (228)	7 (60)	6 (55)	6 (50)	.39 (3.4)	3.9 (35)
UTR006-008	8:1	51 (447)	47 (413)	45 (394)	106 (938)	49 (438)	45 (397)	38 (340)	.50 (4.4)	2.1 (18)
UTR006-010	10:1	49 (433)	45 (401)	43 (384)	102 (906)	48 (423)	44 (392)	40 (355)	.49 (4.4)	1.8 (16)
UTR006-012	12:1	49 (432)	45 (394)	40 (356)	109 (961)	45 (399)	41 (364)	37 (329)	.39 (3.5)	2.0 (18)
UTR006-014	14:1	46 (411)	43 (383)	42 (368)	97 (860)	45 (402)	42 (374)	41 (360)	.49 (4.4)	2.4 (22)
UTR006-015	15:1	50 (443)	47 (413)	45 (397)	105 (927)	49 (433)	46 (404)	44 (388)	.39 (3.4)	2.4 (21)
UTR006-016	16:1	36 (318)	33 (290)	30 (262)	110 (975)	33 (294)	30 (268)	27 (242)	.39 (3.5)	2.4 (22)
UTR006-020	20:1	45 (398)	41 (363)	37 (328)	106 (939)	41 (367)	38 (335)	34 (303)	.39 (3.5)	2.4 (21)
UTR006-025	25:1	37 (326)	34 (298)	30 (269)	107 (948)	34 (301)	31 (275)	28 (249)	.38 (3.4)	2.3 (21)
UTR006-028	28:1	48 (427)	45 (401)	44 (388)	100 (887)	47 (417)	44 (392)	43 (379)	.39 (3.5)	2.2 (20)
UTR006-030	30:1	30 (266)	26 (232)	25 (217)	93 (822)	28 (246)	24 (215)	23 (201)	.42 (3.7)	2.3 (20)
UTR006-035	35:1	49 (432)	46 (407)	43 (377)	101 (894)	48 (422)	44 (385)	39 (348)	.38 (3.4)	2.3 (20)
UTR006-040	40:1	31 (275)	27 (240)	25 (225)	94 (830)	29 (255)	25 (223)	24 (208)	.39 (3.5)	2.4 (22)
UTR006-050	50:1	32 (283)	28 (247)	26 (232)	94 (836)	30 (262)	26 (229)	24 (215)	.38 (3.4)	2.4 (21)

[1] Ratios are exact, higher ratios are also available, consult factory.
T_r = Rated output torque at rated speed for specified hours of life.
J = Mass moment of inertia reflected to the input shaft (including pinion assembly).

For ordering information see inside back cover

See page 11 for gearhead selection criteria

THOMSON MICRON™
Leading in Motion Control Technology
☎1-888-55-4-MOTION•FAX 516-467-9814•www.thomsonindustries.com

The specifications and data in this publication are believed to be accurate and reliable. However, it is the responsibility of the product user to determine the suitability of Thomson Micron products for a specific application. While defective products will be replaced without charge if promptly returned, no liability is assumed beyond such replacement. © 1998 Thomson Micron, LLC
* Trademark of Thomson Industries, Inc. THOMSON is registered in the U.S. Patent and Trademark Office and in other countries.

UltraTRUE 90* Size 7.5

Helical Right Angle Gearhead Metric

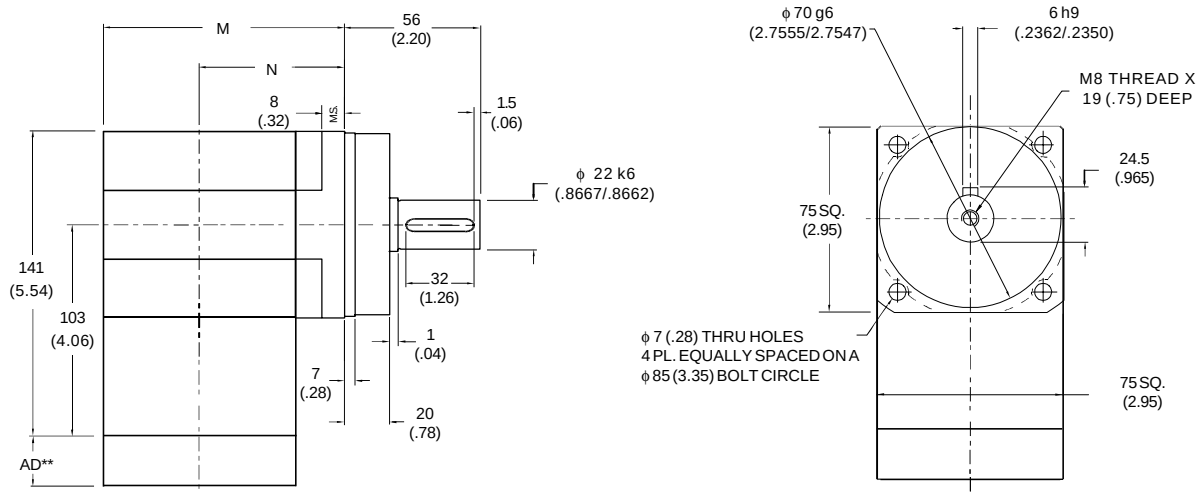

Ratio	Dimension 'M' mm *(in)*	Dimension 'N' mm *(in)*	Backlash (arc-min)	Weight Kg *(lb)*	Efficiency
1:1 to 5:1	89 *(3.51)*	52 *(2.04)*	4 max	4.8 *(10)*	95%
8:1 to 50:1	114.5 *(4.51)*	77 *(3.04)*	5 max	5.3 *(11.1)*	90%

** AD = Adapter length.
Adapter length will vary depending on motor.
Call 1-888-55-4-MOTION for your free Motor Mounting Catalog.

All Dimensions are: mm (inches)

(TABLE 1) PERFORMANCE SPECIFICATIONS

Part Number	Ratio[1]	5,000 HOUR LIFE				10,000 HOUR LIFE			J	Torsional Stiffness
		T_r (1000 rpm) Nm *(in-lb)*	T_r (3000 rpm) Nm *(in-lb)*	T_r (5000 rpm) Nm *(in-lb)*	T_{peak} Nm *(in-lb)*	T_r (1000 rpm) Nm *(in-lb)*	T_r (3000 rpm) Nm *(in-lb)*	T_r (5000 rpm) Nm *(in-lb)*	kg-cm² *(in-lb-sec² x10 -4)*	Nm/arc-min *(in-lb/arc-min)*
UTR075-001	1:1	25 (220)	23 (200)	20 (181)	71 (625)	23 (203)	21 (185)	19 (167)	3.7 (33)	5.1 (46)
UTR075-002	2:1	56 (498)	51 (455)	46 (411)	159 (1410)	52 (460)	47 (420)	43 (380)	1.9 (17)	7.7 (69)
UTR075-003	3:1	37 (329)	34 (300)	31 (271)	129 (1146)	34 (304)	31 (277)	28 (250)	1.6 (15)	8.8 (78)
UTR075-004	4:1	28 (252)	26 (230)	23 (208)	99 (880)	26 (232)	24 (212)	22 (192)	1.5 (13)	9.2 (81)
UTR075-005	5:1	21 (185)	19 (169)	17 (153)	83 (735)	19 (171)	18 (156)	16 (141)	1.5 (13)	9.4 (83)
UTR075-008	8:1	91 (802)	83 (737)	79 (702)	189 (1671)	89 (785)	81 (720)	78 (686)	1.9 (17)	4.7 (41)
UTR075-010	10:1	88 (777)	81 (716)	77 (684)	183 (1617)	86 (759)	79 (700)	76 (669)	1.9 (17)	4.1 (36)
UTR075-012	12:1	93 (824)	86 (762)	82 (730)	194 (1715)	91 (805)	84 (746)	81 (714)	1.5 (14)	4.6 (41)
UTR075-014	14:1	83 (738)	77 (685)	74 (657)	174 (1536)	82 (722)	76 (670)	73 (643)	1.9 (17)	6.6 (58)
UTR075-015	15:1	90 (796)	84 (740)	80 (710)	187 (1656)	88 (779)	82 (723)	78 (694)	1.5 (13)	6.7 (59)
UTR075-016	16:1	95 (838)	88 (780)	85 (749)	197 (1743)	93 (820)	86 (762)	83 (732)	1.5 (14)	6.7 (59)
UTR075-020	20:1	91 (810)	85 (756)	82 (727)	190 (1681)	89 (792)	83 (739)	80 (711)	1.5 (14)	6.5 (58)
UTR075-025	25:1	93 (820)	87 (767)	84 (740)	192 (1698)	91 (801)	85 (750)	80 (705)	1.5 (13)	6.4 (57)
UTR075-028	28:1	87 (768)	81 (720)	79 (695)	179 (1589)	85 (751)	80 (704)	77 (679)	1.5 (14)	5.9 (52)
UTR075-030	30:1	54 (480)	47 (418)	44 (391)	166 (1473)	50 (444)	44 (387)	41 (361)	1.6 (15)	6.3 (56)
UTR075-035	35:1	88 (776)	83 (730)	80 (706)	181 (1603)	86 (759)	81 (714)	78 (690)	1.5 (13)	6.3 (56)
UTR075-040	40:1	56 (497)	49 (433)	46 (406)	168 (1489)	52 (460)	45 (401)	42 (375)	1.5 (14)	6.7 (59)
UTR075-050	50:1	58 (510)	50 (446)	47 (418)	170 (1500)	53 (472)	47 (413)	44 (387)	1.5 (13)	6.6 (58)

[1] Ratios are exact, higher ratios are also available, consult factory.
T_r = Rated output torque at rated speed for specified hours of life.
J = Mass moment of inertia reflected to the input shaft (including pinion assembly).

For ordering information see inside back cover

See page 11 for gearhead selection criteria

The specifications and data in this publication are believed to be accurate and reliable. However, it is the responsibility of the product user to determine the suitability of Thomson Micron products for a specific application. While defective products will be replaced without charge if promptly returned, no liability is assumed beyond such replacement. © 1998 Thomson Micron, LLC
* Trademark of Thomson Industries, Inc. THOMSON is registered in the U.S. Patent and Trademark Office and in other countries.

UltraTRUE 90* Size 10
Helical Right Angle Gearhead Metric

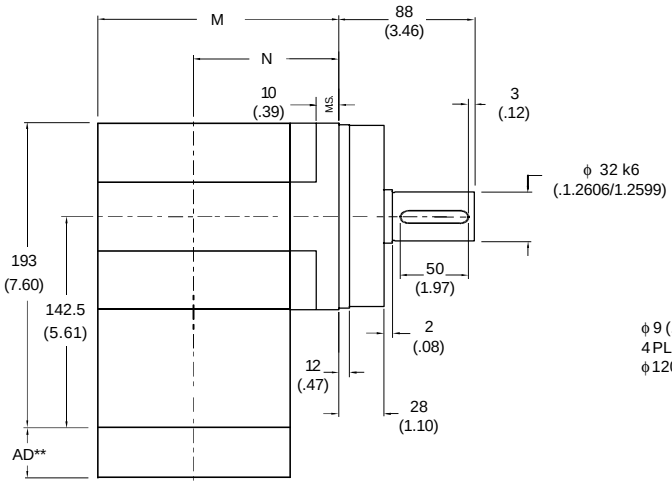

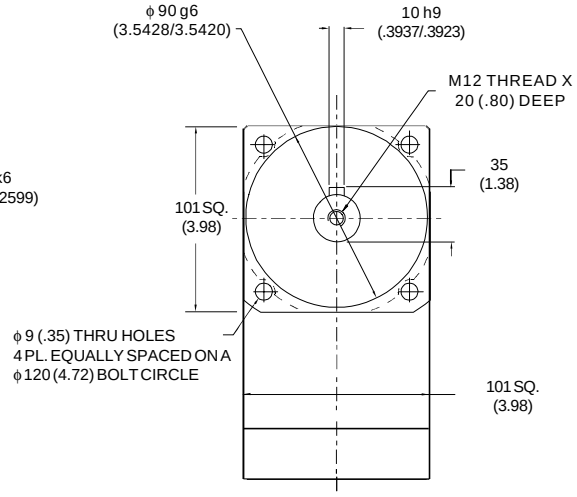

Ratio	Dimension 'M' mm *(in)*	Dimension 'N' mm *(in)*	Backlash (arc-min)	Weight Kg *(lb)*	Efficiency
1:1 to 5:1	121 *(4.75)*	70 *(2.76)*	4 max	11 *(24)*	95%
8:1 to 50:1	149 *(5.88)*	99 *(3.89)*	5 max	12 *(26.2)*	90%

** AD = Adapter length.
Adapter length will vary depending on motor.
Call 1-888-55-4-MOTION for your free Motor Mounting Catalog.

All Dimensions are: mm (inches)

(TABLE 1) PERFORMANCE SPECIFICATIONS

Part Number	Ratio[1]	5,000 HOUR LIFE			T_{peak}	10,000 HOUR LIFE			J	Torsional Stiffness
		T_r (1000 rpm) Nm *(in-lb)*	T_r (3000 rpm) Nm *(in-lb)*	T_r (5000 rpm) Nm *(in-lb)*	Nm *(in-lb)*	T_r (1000 rpm) Nm *(in-lb)*	T_r (3000 rpm) Nm *(in-lb)*	T_r (5000 rpm) Nm *(in-lb)*	kg-cm² *(in-lb-sec² x10 ⁻⁴)*	Nm/arc-min *(in-lb/arc-min)*
UTR010-001	1:1	73 (648)	67 (591)	60 (535)	232 (2052)	68 (598)	62 (546)	56 (494)	6.3 (56)	9.2 (81)
UTR010-002	2:1	131 (1157)	119 (1056)	108 (955)	323 (2856)	121 (1068)	110 (975)	100 (882)	3.2 (29)	15.0 (133)
UTR010-003	3:1	101 (898)	93 (820)	84 (741)	292 (2582)	94 (830)	86 (757)	77 (684)	2.8 (25)	17.1 (151)
UTR010-004	4:1	68 (598)	62 (546)	56 (494)	227 (2006)	62 (552)	57 (504)	51 (456)	2.6 (23)	17.9 (159)
UTR010-005	5:1	51 (449)	46 (409)	42 (370)	187 (1653)	47 (414)	43 (378)	39 (342)	2.5 (23)	18.3 (162)
UTR010-008	8:1	266 (2358)	243 (2147)	229 (2031)	547 (4844)	260 (2305)	217 (1923)	186 (1650)	3.3 (29)	16.6 (147)
UTR010-010	10:1	258 (2286)	236 (2092)	225 (1989)	531 (4701)	253 (2235)	226 (2005)	194 (1720)	3.3 (29)	13.1 (116)
UTR010-012	12:1	274 (2426)	252 (2229)	240 (2125)	564 (4992)	270 (2389)	245 (2171)	210 (1863)	2.6 (23)	18.8 (167)
UTR010-014	14:1	246 (2178)	227 (2007)	217 (1917)	506 (4481)	241 (2129)	222 (1963)	207 (1834)	3.3 (29)	23.1 (204)
UTR010-015	15:1	265 (2349)	245 (2168)	234 (2072)	546 (4832)	259 (2297)	240 (2120)	219 (1943)	2.5 (23)	24.3 (215)
UTR010-016	16:1	270 (2393)	247 (2184)	223 (1975)	575 (5085)	250 (2210)	228 (2016)	206 (1823)	2.6 (23)	24.8 (220)
UTR010-020	20:1	270 (2391)	251 (2219)	240 (2127)	555 (4916)	264 (2338)	245 (2170)	235 (2080)	2.6 (23)	22.1 (196)
UTR010-025	25:1	253 (2243)	231 (2047)	209 (1851)	562 (4974)	234 (2072)	214 (1890)	193 (1709)	2.5 (23)	22.1 (196)
UTR010-028	28:1	256 (2270)	239 (2119)	230 (2038)	526 (4659)	251 (2220)	234 (2072)	225 (1993)	2.6 (23)	19.2 (170)
UTR010-030	30:1	159 (1405)	138 (1220)	129 (1139)	488 (4317)	147 (1300)	128 (1129)	119 (1054)	2.8 (25)	19.1 (169)
UTR010-035	35:1	260 (2298)	243 (2152)	234 (2074)	532 (4707)	254 (2248)	238 (2104)	229 (2028)	2.5 (23)	19.0 (168)
UTR010-040	40:1	164 (1456)	143 (1267)	134 (1184)	494 (4372)	152 (1347)	132 (1173)	124 (1096)	2.6 (23)	24.9 (221)
UTR010-050	50:1	169 (1496)	147 (1304)	138 (1220)	498 (4410)	156 (1384)	136 (1207)	128 (1129)	2.5 (23)	21.9 (194)

[1] Ratios are exact, higher ratios are also available, consult factory.
T_r = Rated output torque at rated speed for specified hours of life.
J = Mass moment of inertia reflected to the input shaft (including pinion assembly).

For ordering information see inside back cover

See page 11 for gearhead selection criteria

THOMSON MICRON™
Leading in Motion Control Technology
☎1-888-55-4-MOTION•FAX 516-467-9814•www.thomsonindustries.com

The specifications and data in this publication are believed to be accurate and reliable. However, it is the responsibility of the product user to determine the suitability of Thomson Micron products for a specific application. While defective products will be replaced without charge if promptly returned, no liability is assumed beyond such replacement. © 1998 Thomson Micron, LLC
* Trademark of Thomson Industries, Inc. THOMSON is registered in the U.S. Patent and Trademark Office and in other countries.

UltraTRUE 90* Size 14
Helical Right Angle Gearhead Metric

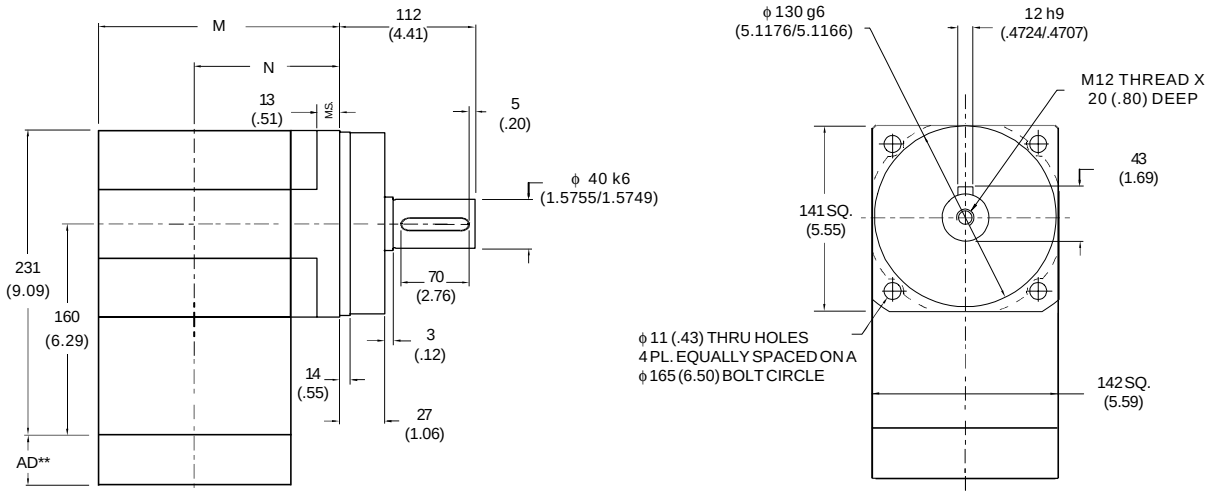

Ratio	Dimension 'M' mm *(in)*	Dimension 'N' mm *(in)*	Backlash (arc-min)	Weight Kg *(lb)*	Efficiency
1:1 to 5:1	166 *(6.54)*	95 *(3.74)*	4 max	24 *(53)*	95%
8:1 to 50:1	222 *(8.74)*	151 *(5.95)*	5 max	29 *(64)*	90%

** AD = Adapter length.
Adapter length will vary depending on motor.
Call 1-888-55-4-MOTION for your free Motor Mounting Catalog.

All Dimensions are: mm (inches)

(TABLE 1) PERFORMANCE SPECIFICATIONS

Part Number	Ratio[1]	5,000 HOUR LIFE			T_{peak}	10,000 HOUR LIFE			J	Torsional Stiffness
		T_r (1000 rpm) Nm *(in-lb)*	T_r (3000 rpm) Nm *(in-lb)*	T_r (5000 rpm) Nm *(in-lb)*	Nm *(in-lb)*	T_r (1000 rpm) Nm *(in-lb)*	T_r (3000 rpm) Nm *(in-lb)*	T_r (5000 rpm) Nm *(in-lb)*	kg-cm² *(in-lb-sec² x10 ⁻⁴)*	Nm/arc-min *(in-lb/arc-min)*
UTR014-001	1:1	158 (1396)	144 (1274)	130 (1152)	380 (3363)	146 (1289)	133 (1177)	120 (1064)	32 (279)	28.4 (252)
UTR014-002	2:1	327 (2893)	298 (2640)	270 (2387)	708 (6270)	302 (2671)	275 (2438)	249 (2204)	16 (143)	46.6 (413)
UTR014-003	3:1	220 (1944)	201 (1774)	181 (1604)	545 (4822)	203 (1796)	185 (1639)	167 (1481)	14 (123)	52.9 (468)
UTR014-004	4:1	158 (1396)	144 (1274)	130 (1152)	471 (4172)	146 (1289)	133 (1177)	120 (1064)	13 (114)	55.5 (491)
UTR014-005	5:1	118 (1047)	108 (956)	98 (864)	396 (3506)	109 (967)	100 (883)	90 (798)	13 (112)	56.8 (503)
UTR014-008	8:1	625 (5531)	565 (5000)	533 (4719)	1269 (11,233)	611 (5408)	530 (4688)	454 (4022)	16 (146)	36.7 (325)
UTR014-010	10:1	606 (5364)	551 (4876)	522 (4617)	1233 (10,911)	593 (5245)	539 (4768)	474 (4192)	16 (145)	31.9 (282)
UTR014-012	12:1	644 (5702)	588 (5207)	559 (4944)	1313 (11,616)	630 (5576)	575 (5092)	513 (4542)	13 (116)	22.1 (195)
UTR014-014	14:1	578 (5118)	530 (4690)	504 (4461)	1179 (10,430)	565 (5005)	518 (4586)	493 (4363)	16 (145)	51.6 (457)
UTR014-015	15:1	624 (5522)	572 (5067)	545 (4824)	1272 (11,253)	610 (5399)	560 (4955)	533 (4717)	12 (113)	51.7 (457)
UTR014-016	16:1	631 (5587)	576 (5099)	521 (4610)	1340 (11,860)	583 (5160)	532 (4708)	481 (4257)	13 (115)	52.8 (467)
UTR014-020	20:1	636 (5627)	587 (5194)	561 (4963)	1296 (11,471)	622 (5503)	574 (5079)	548 (4854)	13 (115)	49.2 (435)
UTR014-025	25:1	592 (5240)	540 (4782)	488 (4324)	1314 (11,625)	547 (4839)	499 (4415)	451 (3992)	12 (113)	49.2 (435)
UTR014-028	28:1	605 (5350)	561 (4969)	539 (4767)	1231 (10,896)	591 (5232)	549 (4859)	527 (4661)	13 (115)	42.8 (379)
UTR014-030	30:1	380 (3363)	329 (2914)	307 (2715)	1143 (10,111)	352 (3112)	305 (2696)	284 (2512)	14 (124)	44.7 (396)
UTR014-035	35:1	612 (5420)	571 (5052)	549 (4857)	1246 (11,024)	599 (5300)	558 (4941)	537 (4750)	12 (113)	40.2 (356)
UTR014-040	40:1	394 (3486)	342 (3028)	319 (2826)	1159 (10,257)	364 (3226)	317 (2802)	295 (2615)	13 (115)	52.6 (466)
UTR014-050	50:1	405 (3584)	352 (3118)	329 (2914)	1171 (10,360)	375 (3316)	326 (2886)	305 (2696)	12 (112)	49.2 (435)

[1] Ratios are exact, higher ratios are also available, consult factory.
T_r = Rated output torque at rated speed for specified hours of life.
J = Mass moment of inertia reflected to the input shaft (including pinion assembly).

For ordering information see inside back cover

See page 11 for gearhead selection criteria

The specifications and data in this publication are believed to be accurate and reliable. However, it is the responsibility of the product user to determine the suitability of Thomson Micron products for a specific application. While defective products will be replaced without charge if promptly returned, no liability is assumed beyond such replacement. © 1998 Thomson Micron, LLC
* Trademark of Thomson Industries, Inc. THOMSON is registered in the U.S. Patent and Trademark Office and in other countries.

UltraTRUE 90* Size 18
Helical Right Angle Gearhead Metric

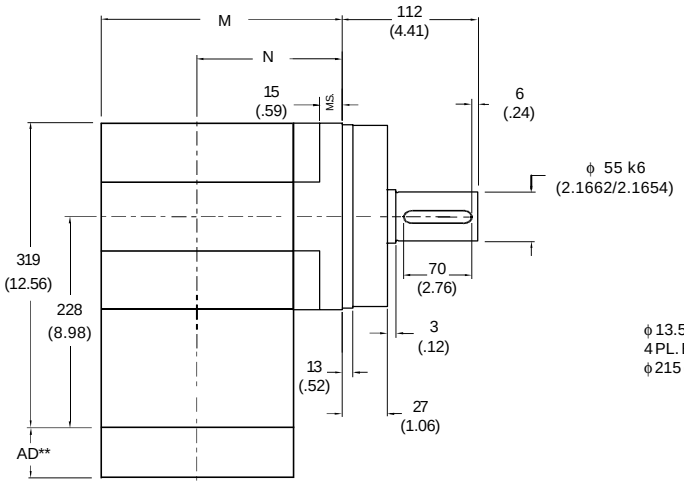

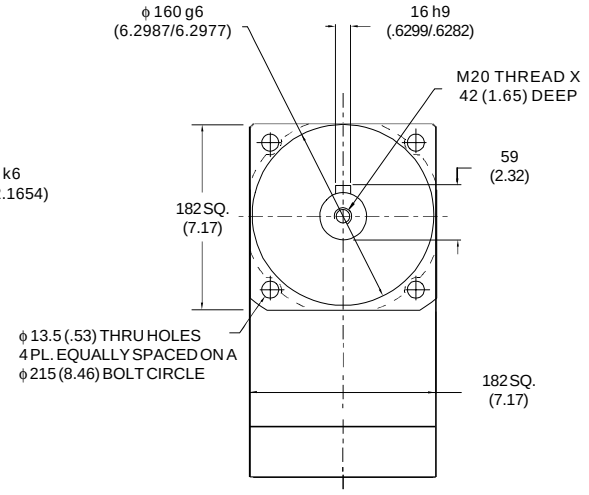

Ratio	Dimension 'M' mm *(in)*	Dimension 'N' mm *(in)*	Backlash (arc-min)	Weight Kg *(lb)*	Efficiency
1:1 to 5:1	219 *(8.64)*	128 *(5.05)*	4 max	43 *(96)*	95%
8:1 to 50:1	273 *(10.76)*	182 *(7.18)*	5 max	48 *(106)*	90%

** AD = Adapter length.
Adapter length will vary depending on motor.
Call 1-888-55-4-MOTION for your free Motor Mounting Catalog.

All Dimensions are: mm (inches)

(TABLE 1) PERFORMANCE SPECIFICATIONS

Part Number	Ratio[1]	5,000 HOUR LIFE			T_{peak}	10,000 HOUR LIFE			J	Torsional Stiffness
		T_r (1000 rpm) Nm *(in-lb)*	T_r (3000 rpm) Nm *(in-lb)*	T_r (5000 rpm) Nm *(in-lb)*	Nm *(in-lb)*	T_r (1000 rpm) Nm *(in-lb)*	T_r (3000 rpm) Nm *(in-lb)*	T_r (5000 rpm) Nm *(in-lb)*	kg-cm² *(in-lb-sec² x10 -4)*	Nm/arc-min *(in-lb/arc-min)*
UTR018-001	1:1	248 (2195)	226 (2003)	205 (1811)	819 (7246)	229 (2027)	209 (1850)	189 (1672)	111 (985)	50 (440)
UTR018-002	2:1	654 (5786)	597 (5280)	539 (4774)	1911 (16,914)	604 (5343)	551 (4876)	498 (4408)	57 (505)	82 (722)
UTR018-003	3:1	507 (4489)	463 (4096)	419 (3704)	1674 (14,817)	468 (4145)	427 (3783)	386 (3420)	49 (434)	93 (820)
UTR018-004	4:1	361 (3192)	329 (2913)	298 (2633)	1190 (10,536)	333 (2947)	304 (2690)	275 (2432)	46 (403)	97 (860)
UTR018-005	5:1	254 (2245)	231 (2048)	209 (1852)	837 (7410)	234 (2073)	214 (1892)	193 (1710)	45 (396)	99 (880)
UTR018-008	8:1	1460 (12,920)	1309 (11,589)	1230 (10,888)	2929 (25,920)	1428 (12,634)	1184 (10,476)	1016 (8988)	45 (401)	113 (998)
UTR018-010	10:1	1418 (12,547)	1279 (11,322)	1206 (10,673)	2851 (25,228)	1386 (12,269)	1234 (10,918)	1058 (9366)	45 (398)	92 (812)
UTR018-012	12:1	1509 (13,352)	1368 (12,108)	1294 (11,448)	3040 (26,900)	1475 (13,057)	1337 (11,832)	1147 (10,150)	36 (317)	63 (560)
UTR018-014	14:1	1355 (11,993)	1234 (10,917)	1169 (10,344)	2733 (24,185)	1325 (11,728)	1206 (10,675)	1129 (9989)	45 (398)	111 (986)
UTR018-015	15:1	1463 (12,944)	1333 (11,800)	1265 (11,192)	2950 (26,109)	1430 (12,657)	1304 (11,539)	1195 (10,578)	35 (310)	144 (1272)
UTR018-016	16:1	1443 (12,769)	1317 (11,652)	1191 (10,536)	3111 (27,532)	1332 (11,791)	1216 (10,760)	1099 (9729)	36 (316)	147 (1299)
UTR018-020	20:1	1493 (13,209)	1370 (12,121)	1304 (11,541)	3014 (26,674)	1460 (12,917)	1339 (11,853)	1275 (11,285)	36 (316)	142 (1257)
UTR018-025	25:1	1268 (11,226)	1158 (10,245)	1047 (9263)	3060 (27,078)	1171 (10,366)	1069 (9460)	967 (8554)	35 (309)	119 (1055)
UTR018-028	28:1	1421 (12,576)	1313 (11,620)	1255 (11,110)	2870 (25,400)	1390 (12,298)	1284 (11,362)	1228 (10,864)	36 (316)	126 (1113)
UTR018-030	30:1	897 (7935)	775 (6856)	721 (6377)	2665 (23,583)	830 (7342)	717 (6344)	667 (5900)	38 (339)	113 (997)
UTR018-035	35:1	1441 (12,750)	1337 (11,828)	1281 (11,338)	2908 (25,736)	1409 (12,468)	1307 (11,567)	1253 (11,087)	35 (309)	113 (998)
UTR018-040	40:1	930 (8231)	806 (7131)	751 (6645)	2708 (23,967)	861 (7616)	746 (6599)	695 (6149)	36 (314)	147 (1299)
UTR018-050	50:1	956 (8465)	830 (7348)	775 (6856)	2739 (24,239)	885 (7832)	768 (6799)	717 (6344)	35 (308)	142 (1257)

[1] Ratios are exact, higher ratios are also available, consult factory.
T_r = Rated output torque at rated speed for specified hours of life.
J = Mass moment of inertia reflected to the input shaft (including pinion assembly).

For ordering information see inside back cover

See page 11 for gearhead selection criteria

THOMSON MICRON™
Leading in Motion Control Technology
☎1-888-55-4-MOTION•FAX 516-467-9814•www.thomsonindustries.com

The specifications and data in this publication are believed to be accurate and reliable. However, it is the responsibility of the product user to determine the suitability of Thomson Micron products for a specific application. While defective products will be replaced without charge if promptly returned, no liability is assumed beyond such replacement. © 1998 Thomson Micron, LLC
* Trademark of Thomson Industries, Inc. THOMSON is registered in the U.S. Patent and Trademark Office and in other countries.

RADIAL AND AXIAL LOAD RATINGS (Table 2)

These graphs display the allowable radial load at a given distance (X) from the mounting surface based on an L_{10} life of 10,000 hours for the mean output speed, n_{mout}, as described on page 11.

UTR006 Radial and Axial Load Ratings
Ratios 1:1 thru 5:1 Only

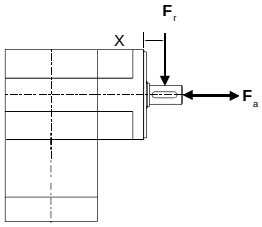

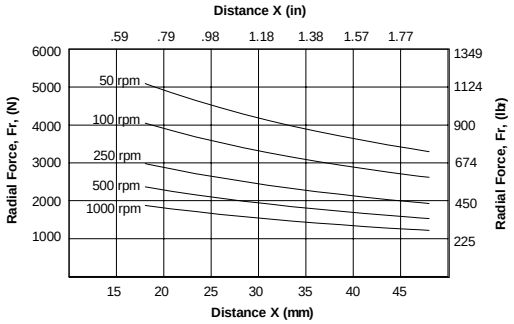

Speed (rpm)	Axial Load, F_a N (lb_f)
50	6543 (*1471*)
100	5191 (*1167*)
250	3825 (*860*)
500	3038 (*683*)
1000	2411 (*542*)

UTR075 Radial and Axial Load Ratings
Ratios 1:1 thru 5:1 Only

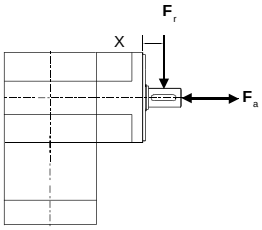

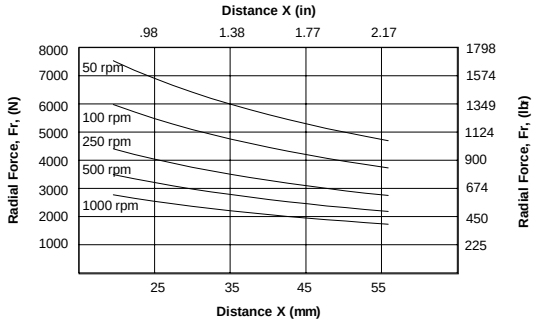

Speed (rpm)	Axial Load, F_a N (lb_f)
50	9003 (*2024*)
100	7148 (*1607*)
250	5266 (*1184*)
500	4181 (*940*)
1000	3318 (*746*)

UTR010 Radial and Axial Load Ratings
Ratios 1:1 thru 5:1 Only

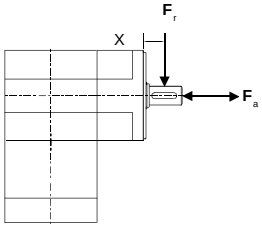

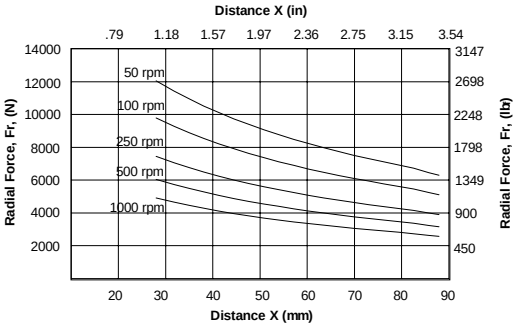

Speed (rpm)	Axial Load, F_a N (lb_f)
50	12,432 (*2795*)
100	10,097 (*2270*)
250	7668 (*1724*)
500	6232 (*1401*)
1000	5062 (*1138*)

UTR014 Radial and Axial Load Ratings
Ratios 1:1 thru 5:1 Only

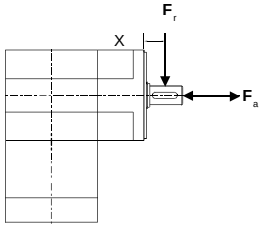

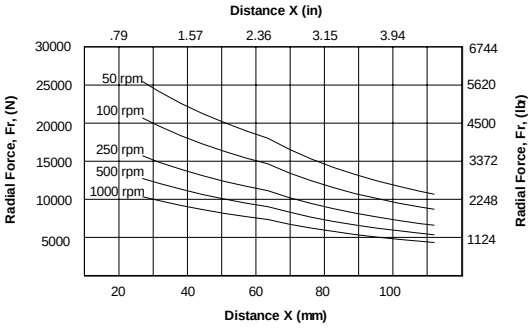

Speed (rpm)	Axial Load, F_a N (lb_f)
50	23,067 (*5186*)
100	18,735 (*4212*)
250	14,234 (*3200*)
500	11,560 (*2599*)
1000	9390 (*2111*)

UTR018 Radial and Axial Load Ratings
Ratios 1:1 thru 5:1 Only

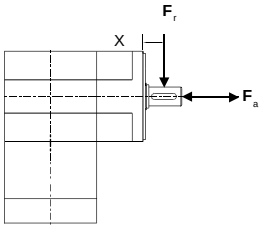

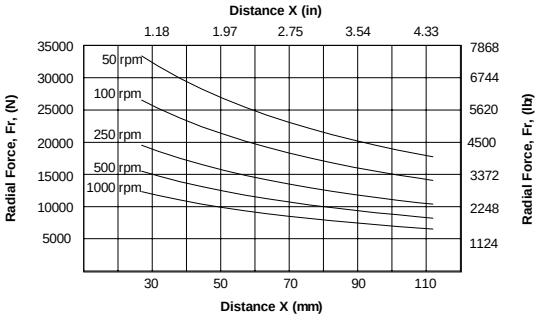

Speed (rpm)	Axial Load, F_a N (lb_f)
50	31,398 (*7059*)
100	24,922 (*5603*)
250	18,361 (*4128*)
500	14,576 (*3277*)
1000	11,569 (*2601*)

The specifications and data in this publication are believed to be accurate and reliable. However, it is the responsibility of the product user to determine the suitability of Thomson Micron products for a specific application. While defective products will be replaced without charge if promptly returned, no liability is assumed beyond such replacement. © 1998 Thomson Micron, LLC
* Trademark of Thomson Industries, Inc. THOMSON is registered in the U.S. Patent and Trademark Office and in other countries.

RADIAL AND AXIAL LOAD RATINGS (Table 2)

These graphs display the allowable radial load at a given distance (X) from the mounting surface based on an L_{10} life of 10,000 hours for the mean output speed, n_{mout}, as described on page 11.

UTR006 Radial and Axial Load Ratings
Ratios 8:1 thru 50:1 Only

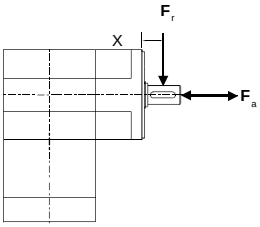

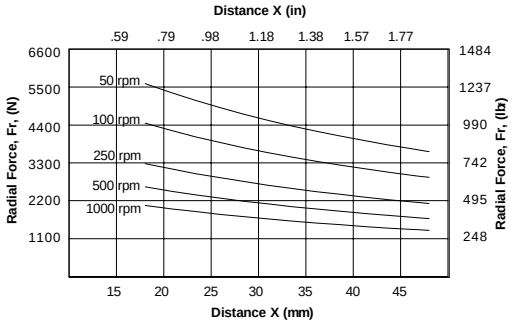

Speed (rpm)	Axial Load, F_a N (lb_f)
50	7198 (*1618*)
100	5710 (*1284*)
250	4208 (*946*)
500	3342 (*751*)
1000	2652 (*596*)

UTR075 Radial and Axial Load Ratings
Ratios 8:1 thru 50:1 Only

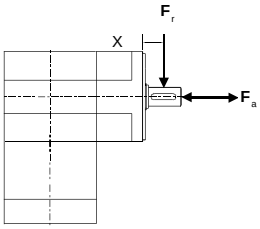

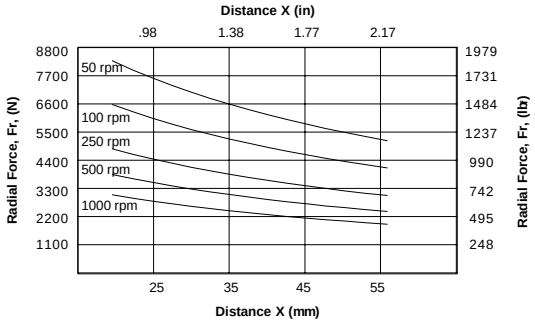

Speed (rpm)	Axial Load, F_a N (lb_f)
50	9903 (2227)
100	7863 (1768)
250	5793 (1303)
500	4599 (1034)
1000	3650 (821)

UTR010 Radial and Axial Load Ratings
Ratios 8:1 thru 50:1 Only

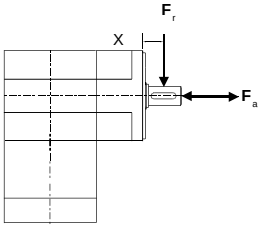

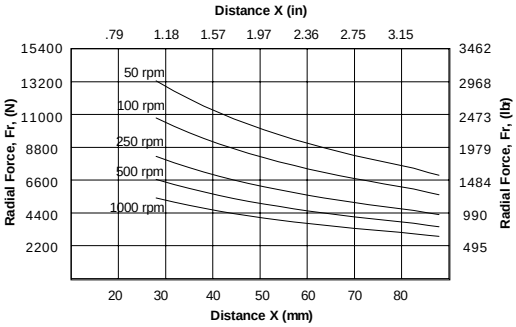

Speed (rpm)	Axial Load, F_a N (lb_f)
50	13,675 (3075)
100	11,107 (2497)
250	8435 (1897)
500	6855 (1542)
1000	5568 (1252)

UTR014 Radial and Axial Load Ratings
Ratios 8:1 thru 50:1 Only

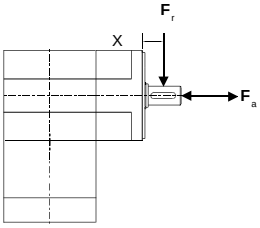

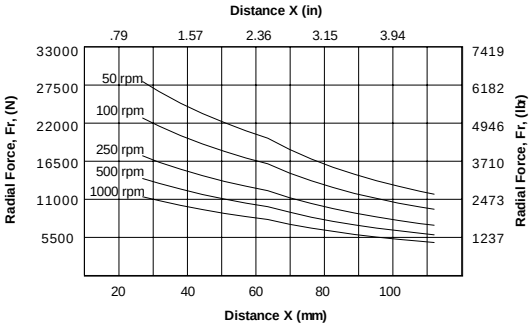

Speed (rpm)	Axial Load, F_a N (lb_f)
50	25,374 (5705)
100	20,609 (4633)
250	15,657 (3520)
500	12,716 (2859)
1000	10,329 (2322)

UTR018 Radial and Axial Load Ratings
Ratios 8:1 thru 50:1 Only

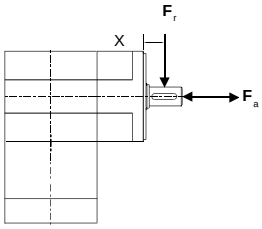

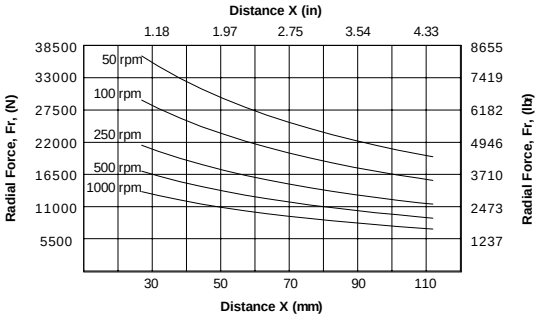

Speed (rpm)	Axial Load, F_a N (lb_f)
50	34,538 (7765)
100	27,414 (6163)
250	20,197 (4541)
500	16,034 (3605)
1000	12,726 (2861)

THOMSON MICRON™
Leading in Motion Control Technology
☎1-888-55-4-MOTION•FAX 516-467-9814•www.thomsonindustries.com

The specifications and data in this publication are believed to be accurate and reliable. However, it is the responsibility of the product user to determine the suitability of Thomson Micron products for a specific application. While defective products will be replaced without charge if promptly returned, no liability is assumed beyond such replacement. © 1998 Thomson Micron, LLC
* Trademark of Thomson Industries, Inc. THOMSON is registered in the U.S. Patent and Trademark Office and in other countries.

PowerTRUE 90 *
Right Angle Gearheads

Ready for Immediate Delivery

Precision: 6 arc-minutes
Frame Sizes: 60, 75, 100, 142, 180mm
Torque Capacity: up to 16,914 in-lb
Ratio Availability: 1:1 thru 5:1
Radial load capacity: up to 7500 lb
Mounting System:RediMount*

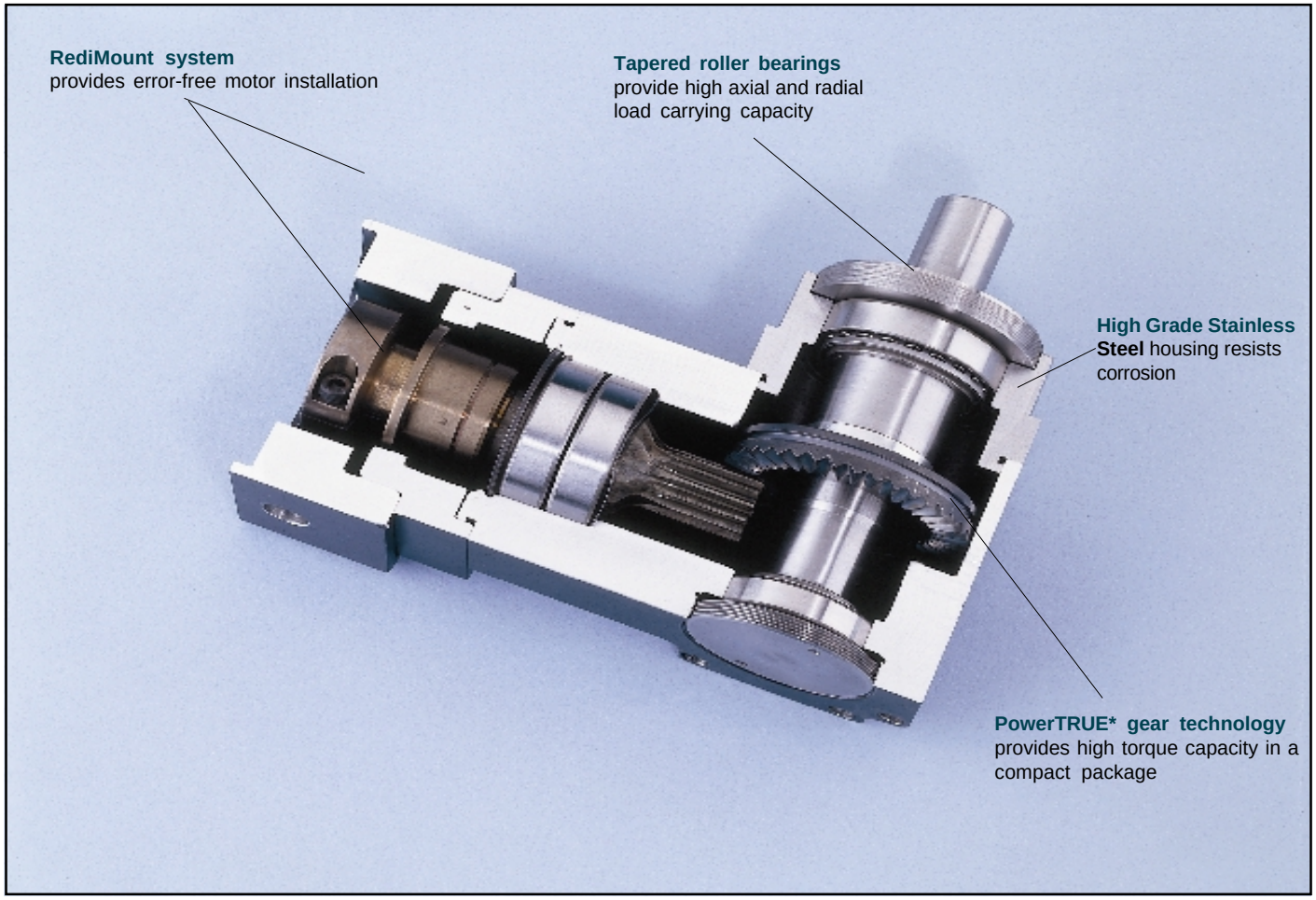

Index Page

PowerTRUE 90 Size 6 Planetary Gearhead.....PTR2
PowerTRUE 90 Size 7.5 Planetary Gearhead.....PTR3
PowerTRUE 90 Size 10 Planetary Gearhead.....PTR4
PowerTRUE 90 Size 14 Planetary Gearhead.....PTR5
PowerTRUE 90 Size 18 Planetary Gearhead.....PTR6
Selection.....11
Mounting Tools.....80
Ordering.....Inside Back Cover

The specifications and data in this publication are believed to be accurate and reliable. However, it is the responsibility of the product user to determine the suitability of Thomson Micron products for a specific application. While defective products will be replaced without charge if promptly returned, no liability is assumed beyond such replacement. © 1998 Thomson Micron, LLC
* Trademark of Thomson Industries, Inc. THOMSON is registered in the U.S. Patent Office and in other countries.

THOMSON MICRON
Leading in Motion Control Technology
☎1-888-55-4-MOTION•FAX 516-467-9814•www.thomsonindustries.com

PowerTRUE 90* Size 6
Right Angle Gearhead Metric

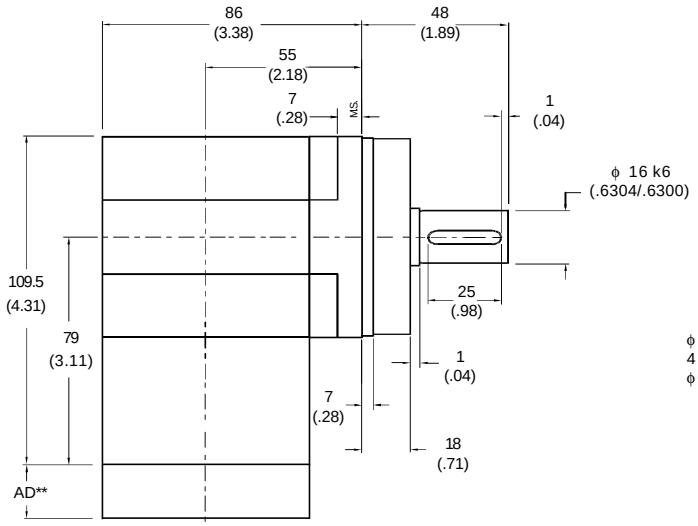

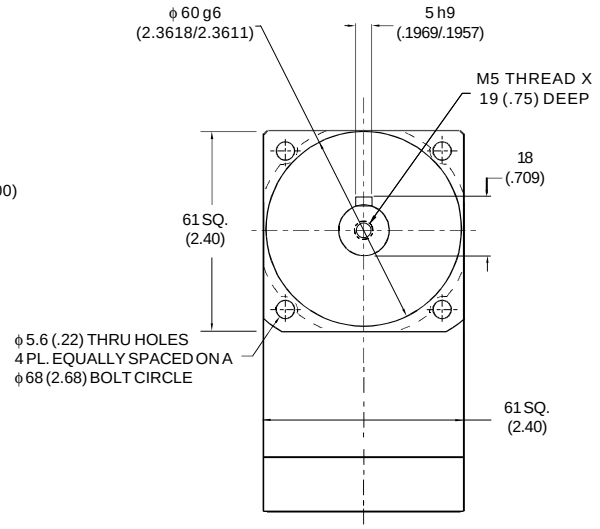

** AD = Adapter length.
Adapter length will vary depending on motor.
Call 1-888-55-4-MOTION for your free Motor Mounting Catalog.

All Dimensions are: mm (inches)

Ratio	Backlash (arc-min)	Weight Kg *(lb)*	Efficiency
1:1 to 5:1	6 max	2.5 *(5.5)*	95%

(TABLE 1) PERFORMANCE SPECIFICATIONS

Part Number	Ratio[1]	5,000 HOUR LIFE			T_{peak}	10,000 HOUR LIFE			J	Torsional Stiffness
		T_r (1000 rpm) Nm *(in-lb)*	T_r (3000 rpm) Nm *(in-lb)*	T_r (5000 rpm) Nm *(in-lb)*	Nm *(in-lb)*	T_r (1000 rpm) Nm *(in-lb)*	T_r (3000 rpm) Nm *(in-lb)*	T_r (5000 rpm) Nm *(in-lb)*	kg-cm² *(in-lb-sec² x10 ⁻⁴)*	Nm/arc-min *(in-lb/arc-min)*
PTR006-001	1:1	9 (77)	8 (70)	7 (64)	28 (247)	8 (71)	7 (65)	7 (59)	.97 (8.4)	2.1 (19)
PTR006-002	2:1	19 (170)	17 (155)	16 (140)	52 (456)	18 (157)	16 (143)	15 (129)	.50 (4.3)	3.2 (29)
PTR006-003	3:1	12 (108)	11 (99)	10 (89)	39 (342)	11 (100)	10 (91)	9 (82)	.43 (3.7)	3.6 (32)
PTR006-004	4:1	9 (80)	8 (73)	7 (66)	34 (301)	8 (73)	8 (67)	7 (61)	.40 (3.4)	3.8 (34)
PTR006-005	5:1	7 (65)	7 (60)	6 (54)	26 (228)	7 (60)	6 (55)	6 (50)	.39 (3.4)	3.9 (35)

[1] Ratios are exact, higher ratios are also available, consult factory.
T_r = Rated output torque at rated speed for specified hours of life.
J = Mass moment of inertia reflected to the input shaft (including pinion assembly).

For ordering information see inside back cover

See page 11 for gearhead selection criteria

(TABLE 2) RADIAL AND AXIAL LOAD RATINGS

These graphs display the allowable radial load at a given distance (X) from the mounting surface based on an L_{10} life of 10,000 hours for the mean output speed, n_{mout}, as described on page 11.

PTR006 Radial Load Ratings

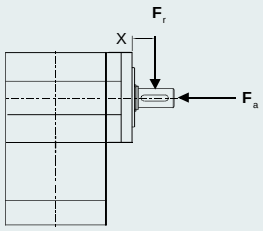

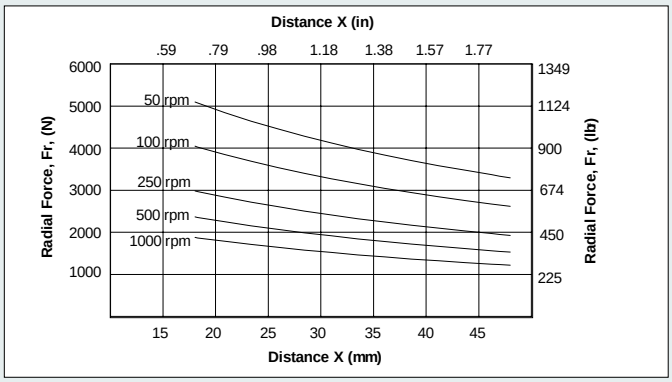

PTR006 Axial Load Ratings

Speed (rpm)	Axial Load, F_a N *(lb_f)*
50	6543 *(1471)*
100	5191 *(1167)*
250	3825 *(860)*
500	3038 *(683)*
1000	2411 *(542)*

THOMSON MICRON
Leading in Motion Control Technology
☎1-888-55-4-MOTION•FAX 516-467-9814•www.thomsonindustries.com

The specifications and data in this publication are believed to be accurate and reliable. However, it is the responsibility of the product user to determine the suitability of Thomson Micron products for a specific application. While defective products will be replaced without charge if promptly returned, no liability is assumed beyond such replacement. © 1998 Thomson Micron, LLC
* Trademark of Thomson Industries, Inc. THOMSON is registered in the U.S. Patent Office and in other

PowerTRUE 90* Size 7.5
Right Angle Gearhead Metric

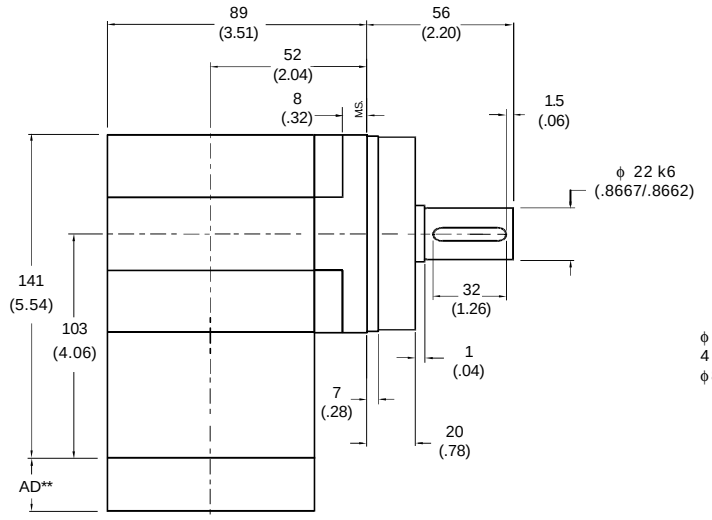

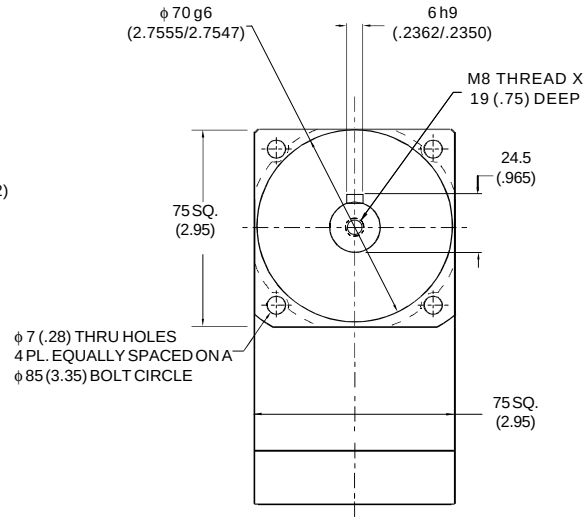

** AD = Adapter length.
Adapter length will vary depending on motor.
Call 1-888-55-4-MOTION for your free Motor Mounting Catalog.

All Dimensions are: mm (inches)

Ratio	Backlash (arc-min)	Weight Kg *(lb)*	Efficiency
1:1 to 5:1	6 max	4.8 *(10)*	95%

(TABLE 1) PERFORMANCE SPECIFICATIONS

Part Number	Ratio[1]	5,000 HOUR LIFE			T_{peak}	10,000 HOUR LIFE			J	Torsional Stiffness
		T_r (1000 rpm) Nm *(in-lb)*	T_r (3000 rpm) Nm *(in-lb)*	T_r (5000 rpm) Nm *(in-lb)*	Nm *(in-lb)*	T_r (1000 rpm) Nm *(in-lb)*	T_r (3000 rpm) Nm *(in-lb)*	T_r (5000 rpm) Nm *(in-lb)*	kg-cm² *(in-lb-sec² x10 ⁻⁴)*	Nm/arc-min *(in-lb/arc-min)*
PTR075-001	1:1	25 (220)	23 (200)	20 (181)	71 (625)	23 (203)	21 (185)	19 (167)	3.7 (33)	5.1 (46)
PTR075-002	2:1	56 (498)	51 (455)	46 (411)	159 (1410)	52 (460)	47 (420)	43 (380)	1.9 (17)	7.7 (69)
PTR075-003	3:1	37 (329)	34 (300)	31 (271)	129 (1146)	34 (304)	31 (277)	28 (250)	1.6 (15)	8.8 (78)
PTR075-004	4:1	28 (252)	26 (230)	23 (208)	99 (880)	26 (232)	24 (212)	22 (192)	1.5 (13)	9.2 (81)
PTR075-005	5:1	21 (185)	19 (169)	17 (153)	83 (735)	19 (171)	18 (156)	16 (141)	1.5 (13)	9.4 (83)

[1] Ratios are exact, higher ratios are also available, consult factory.
T_r = Rated output torque at rated speed for specified hours of life.
J = Mass moment of inertia reflected to the input shaft (including pinion assembly).

For ordering information see inside back cover

See page 11 for gearhead selection criteria

(TABLE 2) RADIAL AND AXIAL LOAD RATINGS

These graphs display the allowable radial load at a given distance (X) from the mounting surface based on an L_{10} life of 10,000 hours for the mean output speed, n_{mout}, as described on page 11.

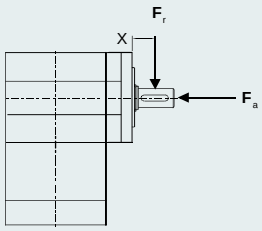

PTR075 Radial Load Ratings

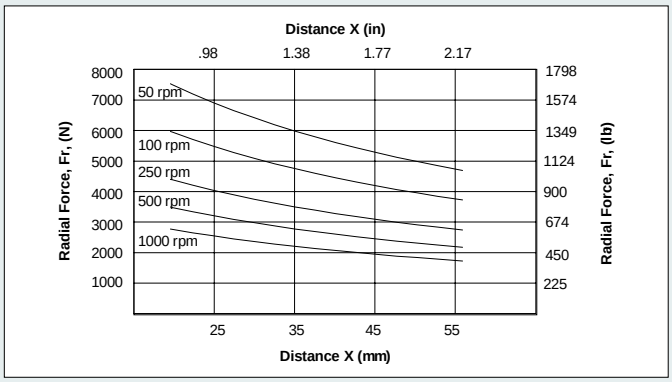

PTR075 Axial Load Ratings

Speed (rpm)	Axial Load, F_a N *(lb_f)*
50	9003 *(2024)*
100	7148 *(1607)*
250	5266 *(1184)*
500	4181 *(940)*
1000	3318 *(746)*

The specifications and data in this publication are believed to be accurate and reliable. However, it is the responsibility of the product user to determine the suitability of Thomson Micron products for a specific application. While defective products will be replaced without charge if promptly returned, no liability is assumed beyond such replacement. © 1998 Thomson Micron, LLC
* Trademark of Thomson Industries, Inc. THOMSON is registered in the U.S. Patent Office and in other countries.

THOMSON MICRON*
Leading in Motion Control Technology
☎1-888-55-4-MOTION•FAX 516-467-9814•www.thomsonindustries.com

PowerTRUE 90* Size 10
Right Angle Gearhead Metric

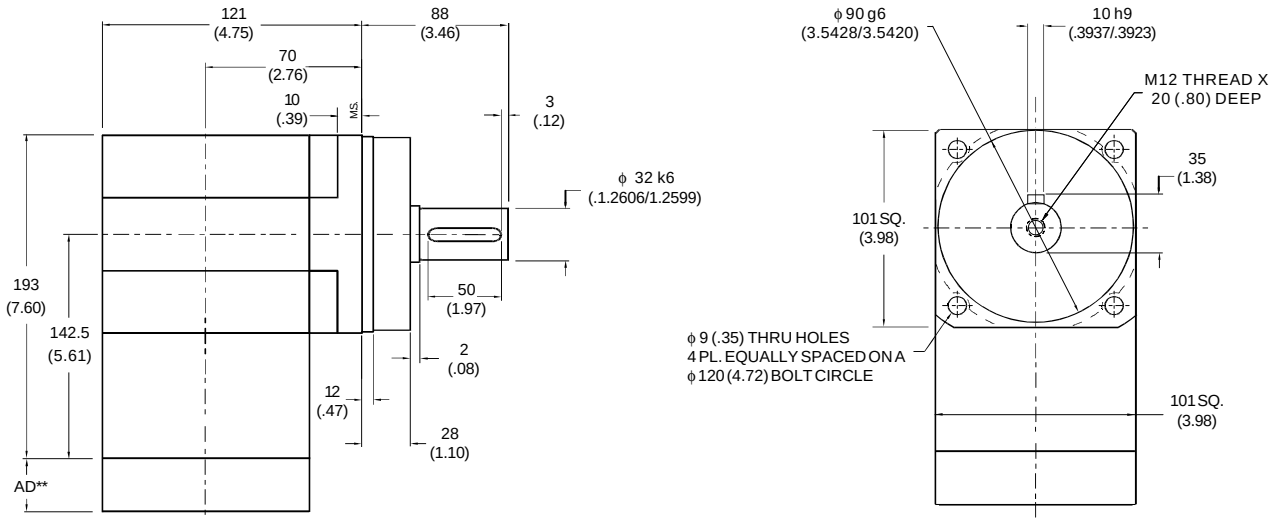

Ratio	Backlash (arc-min)	Weight Kg *(lb)*	Efficiency
1:1 to 5:1	6 max	11 *(24)*	95%

** AD = Adapter length.
Adapter length will vary depending on motor.
Call 1-888-55-4-MOTION for your free Motor Mounting Catalog.

All Dimensions are: mm (inches)

(TABLE 1) PERFORMANCE SPECIFICATIONS

Part Number	Ratio[1]	5,000 HOUR LIFE			T_{peak}	10,000 HOUR LIFE			J	Torsional Stiffness
		T_r (1000 rpm) Nm *(in-lb)*	T_r (3000 rpm) Nm *(in-lb)*	T_r (5000 rpm) Nm *(in-lb)*	Nm *(in-lb)*	T_r (1000 rpm) Nm *(in-lb)*	T_r (3000 rpm) Nm *(in-lb)*	T_r (5000 rpm) Nm *(in-lb)*	kg-cm² *(in-lb-sec² x10 ⁻⁴)*	Nm/arc-min *(in-lb/arc-min)*
PTR010-001	1:1	73 (648)	67 (591)	60 (535)	232 (2052)	68 (598)	62 (546)	56 (494)	6.3 (56)	9.2 (81)
PTR010-002	2:1	131 (1157)	119 (1056)	108 (955)	323 (2856)	121 (1068)	110 (975)	100 (882)	3.2 (29)	15.0 (133)
PTR010-003	3:1	101 (898)	93 (820)	84 (741)	292 (2582)	94 (830)	86 (757)	77 (684)	2.8 (25)	17.1 (151)
PTR010-004	4:1	68 (598)	62 (546)	56 (494)	227 (2006)	62 (552)	57 (504)	51 (456)	2.6 (23)	17.9 (159)
PTR010-005	5:1	51 (449)	46 (409)	42 (370)	187 (1653)	47 (414)	43 (378)	39 (342)	2.5 (23)	18.3 (162)

[1] Ratios are exact, higher ratios are also available, consult factory.
T_r = Rated output torque at rated speed for specified hours of life.
J = Mass moment of inertia reflected to the input shaft (including pinion assembly).

For ordering information see inside back cover

See page 11 for gearhead selection criteria

(TABLE 2) RADIAL AND AXIAL LOAD RATINGS

These graphs display the allowable radial load at a given distance (X) from the mounting surface based on an L_{10} life of 10,000 hours for the mean output speed, n_{mout}, as described on page 11.

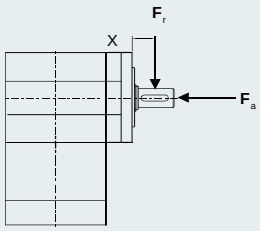

PTR010 Radial Load Ratings

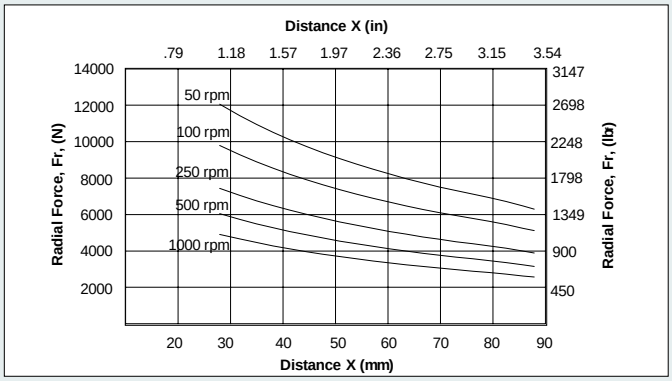

PTR010 Axial Load Ratings

Speed (rpm)	Axial Load, F_a N *(lb_f)*
50	12,432 *(2795)*
100	10,097 *(2270)*
250	7668 *(1724)*
500	6232 *(1401)*
1000	5062 *(1138)*

THOMSON MICRON
Leading in Motion Control Technology
☎1-888-55-4-MOTION•FAX 516-467-9814•www.thomsonindustries.com

The specifications and data in this publication are believed to be accurate and reliable. However, it is the responsibility of the product user to determine the suitability of Thomson Micron products for a specific application. While defective products will be replaced without charge if promptly returned, no liability is assumed beyond such replacement. © 1998 Thomson Micron, LLC
* Trademark of Thomson Industries, Inc. THOMSON is registered in the U.S. Patent Office and in other

PowerTRUE 90* Size 14
Right Angle Gearhead Metric

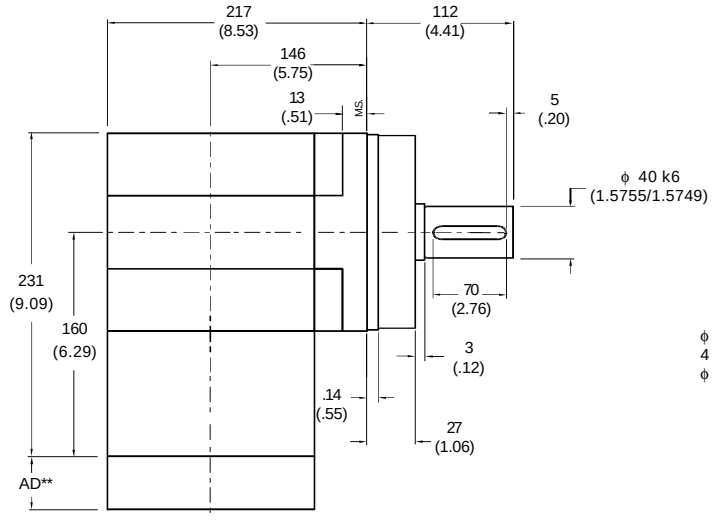

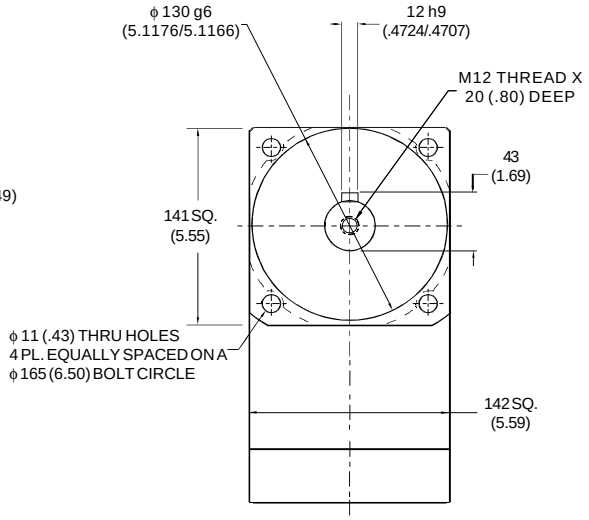

Ratio	Backlash (arc-min)	Weight Kg *(lb)*	Efficiency
1:1 to 5:1	6 max	24 *(53)*	95%

** AD = Adapter length.
Adapter length will vary depending on motor.
Call 1-888-55-4-MOTION for your free Motor Mounting Catalog.

All Dimensions are: mm (inches)

(TABLE 1) PERFORMANCE SPECIFICATIONS

Part Number	Ratio[1]	5,000 HOUR LIFE			T_{peak}	10,000 HOUR LIFE			J	Torsional Stiffness
		T_r (1000 rpm) Nm *(in-lb)*	T_r (3000 rpm) Nm *(in-lb)*	T_r (5000 rpm) Nm *(in-lb)*	Nm *(in-lb)*	T_r (1000 rpm) Nm *(in-lb)*	T_r (3000 rpm) Nm *(in-lb)*	T_r (5000 rpm) Nm *(in-lb)*	kg-cm² *(in-lb-sec² x10 ⁻⁴)*	Nm/arc-min *(in-lb/arc-min)*
PTR014-001	1:1	158 (1396)	144 (1274)	130 (1152)	380 (3363)	146 (1289)	133 (1177)	120 (1064)	32 (279)	28.4 (252)
PTR014-002	2:1	327 (2893)	298 (2640)	270 (2387)	708 (6270)	302 (2671)	275 (2438)	249 (2204)	16 (143)	46.6 (413)
PTR014-003	3:1	220 (1944)	201 (1774)	181 (1605)	545 (4822)	203 (1796)	185 (1639)	167 (1481)	14 (123)	52.9 (468)
PTR014-004	4:1	158 (1396)	144 (1274)	130 (1152)	471 (4172)	146 (1289)	133 (1177)	120 (1064)	13 (114)	55.5 (491)
PTR014-005	5:1	118 (1047)	108 (956)	98 (865)	396 (3506)	109 (967)	100 (883)	90 (798)	13 (112)	56.8 (503)

[1] Ratios are exact, higher ratios are also available, consult factory.
T_r = Rated output torque at rated speed for specified hours of life.
J = Mass moment of inertia reflected to the input shaft (including pinion assembly).

For ordering information see inside back cover

See page 11 for gearhead selection criteria

(TABLE 2) RADIAL AND AXIAL LOAD RATINGS

These graphs display the allowable radial load at a given distance (X) from the mounting surface based on an L_{10} life of 10,000 hours for the mean output speed, n_{mout}, as described on page 11.

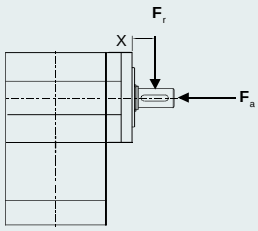

PTR014 Radial Load Ratings

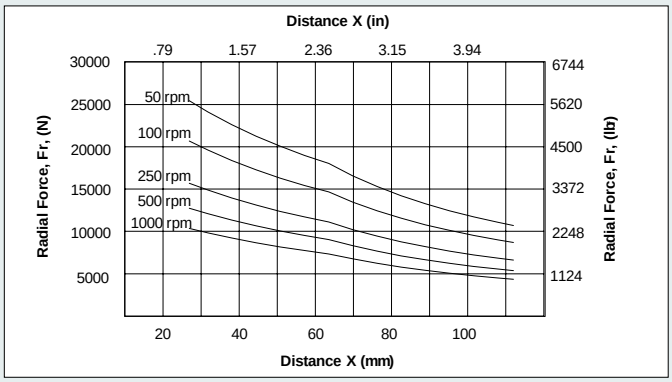

PTR014 Axial Load Ratings

Speed (rpm)	Axial Load, F_a N *(lb_f)*
50	23,067 *(5186)*
100	18,735 *(4212)*
250	14,234 *(3200)*
500	11,560 *(2599)*
1000	9390 *(2111)*

The specifications and data in this publication are believed to be accurate and reliable. However, it is the responsibility of the product user to determine the suitability of Thomson Micron products for a specific application. While defective products will be replaced without charge if promptly returned, no liability is assumed beyond such replacement. © 1998 Thomson Micron, LLC
* Trademark of Thomson Industries, Inc. THOMSON is registered in the U.S. Patent Office and in other countries.

THOMSON MICRON*
Leading in Motion Control Technology
☎1-888-55-4-MOTION•FAX 516-467-9814•www.thomsonindustries.com

PowerTRUE 90* Size 18
Right Angle Gearhead Metric

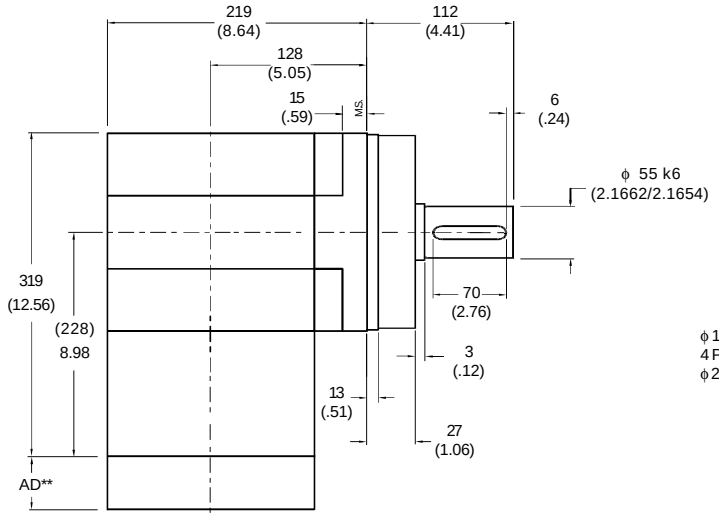

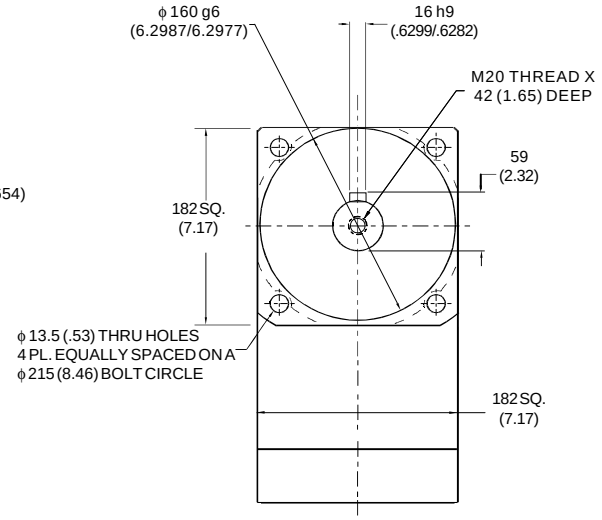

Ratio	Backlash (arc-min)	Weight Kg *(lb)*	Efficiency
1:1 to 5:1	6 max	43 *(96)*	95%

** AD = Adapter length.
Adapter length will vary depending on motor.
Call 1-888-55-4-MOTION for your free Motor Mounting Catalog.

All Dimensions are: mm (inches)

(TABLE 1) PERFORMANCE SPECIFICATIONS

Part Number	Ratio[1]	5,000 HOUR LIFE				10,000 HOUR LIFE			J	Torsional Stiffness
		T_r (1000 rpm) Nm *(in-lb)*	T_r (3000 rpm) Nm *(in-lb)*	T_r (5000 rpm) Nm *(in-lb)*	T_{peak} Nm *(in-lb)*	T_r (1000 rpm) Nm *(in-lb)*	T_r (3000 rpm) Nm *(in-lb)*	T_r (5000 rpm) Nm *(in-lb)*	kg-cm² *(in-lb-sec² x10 ⁻⁴)*	Nm/arc-min *(in-lb/arc-min)*
PTR018-001	1:1	248 (2195)	226 (2003)	205 (1811)	819 (7246)	229 (2027)	209 (1850)	189 (1672)	111 (985)	50 (440)
PTR018-002	2:1	654 (5786)	597 (5280)	539 (4774)	11911 (16,914)	604 (5343)	551 (4876)	498 (4408)	57 (505)	82 (722)
PTR018-003	3:1	507 (4489)	463 (4096)	419 (3704)	1674 (14817)	468 (4145)	427 (3783)	386 (3420)	49 (434)	93 (820)
PTR018-004	4:1	361 (3192)	329 (2913)	298 (2633)	1190 (10,536)	333 (2947)	304 (2690)	275 (2432)	46 (403)	97 (860)
PTR018-005	5:1	254 (2245)	231 (2048)	209 (1852)	837 (7410)	234 (2073)	214 (1892)	193 (1710)	45 (396)	99 (880)

[1] Ratios are exact, higher ratios are also available, consult factory.
T_r = Rated output torque at rated speed for specified hours of life.
J = Mass moment of inertia reflected to the input shaft (including pinion assembly).

For ordering information see inside back cover

See page 11 for gearhead selection criteria

(TABLE 2) RADIAL AND AXIAL LOAD RATINGS

These graphs display the allowable radial load at a given distance (X) from the mounting surface based on an L_{10} life of 10,000 hours for the mean output speed, n_{mout}, as described on page 11.

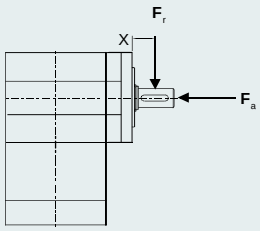

PTR018 Radial Load Ratings

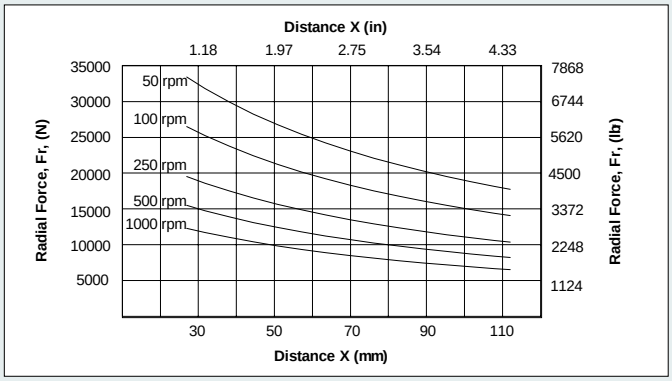

PTR018 Axial Load Ratings

Speed (rpm)	Axial Load, F_a N *(lb_f)*
50	31,398 *(7059)*
100	24,922 *(5603)*
250	18,361 *(4128)*
500	14,576 *(3277)*
1000	11,569 *(2601)*

THOMSON MICRON
Leading in Motion Control Technology
☎1-888-55-4-MOTION•FAX 516-467-9814•www.thomsonindustries.com

The specifications and data in this publication are believed to be accurate and reliable. However, it is the responsibility of the product user to determine the suitability of Thomson Micron products for a specific application. While defective products will be replaced without charge if promptly returned, no liability is assumed beyond such replacement. © 1998 Thomson Micron, LLC
* Trademark of Thomson Industries, Inc. THOMSON is registered in the U.S. Patent Office and in other

AccuLOCK* - Zero Backlash
Flexible Steel Bellows Coupling

Ready for Immediate Delivery

Bore Range: 9mm thru 50mm
Torque Capacity: up to 5310 in-lb
Available in 6 sizes for immediate delivery

- **Lightweight compact design** - meets the low inertia requirement of high performance motion control applications.
- **High torsional stiffness** - provides high stiffness as well as low restoring forces.

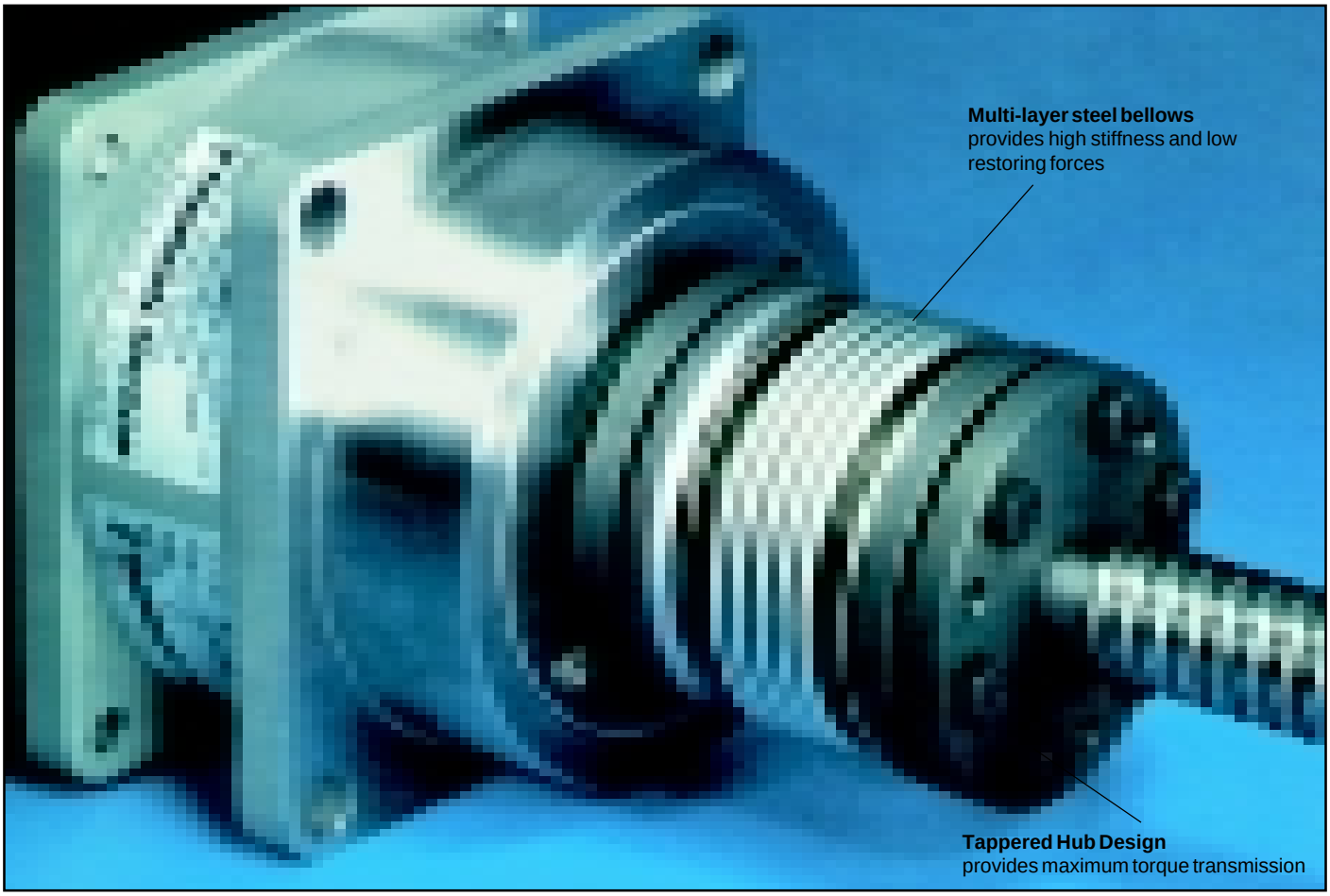

Index Page

Table of Dimensions.....AL2
Technical Data AL2
Allowable Shaft Misalignment.....AL3
Ordering AL3
Mounting Tools.....80

The specifications and data in this publication are believed to be accurate and reliable. However, it is the responsibility of the product user to determine the suitability of Thomson Micron products for a specific application. While defective products will be replaced without charge if promptly returned, no liability is assumed beyond such replacement. © 1998 Thomson Micron, LLC
* Trademark of Thomson Industries, Inc. THOMSON is registered in the U.S. Patent Office and in other countries.

THOMSON MICRON*
Leading in Motion Control Technology
☎1-888-55-4-MOTION•FAX 516-467-9814•www.thomsonindustries.com

AccuLOCK* - Zero Backlash
Flexible Steel Bellows Coupling

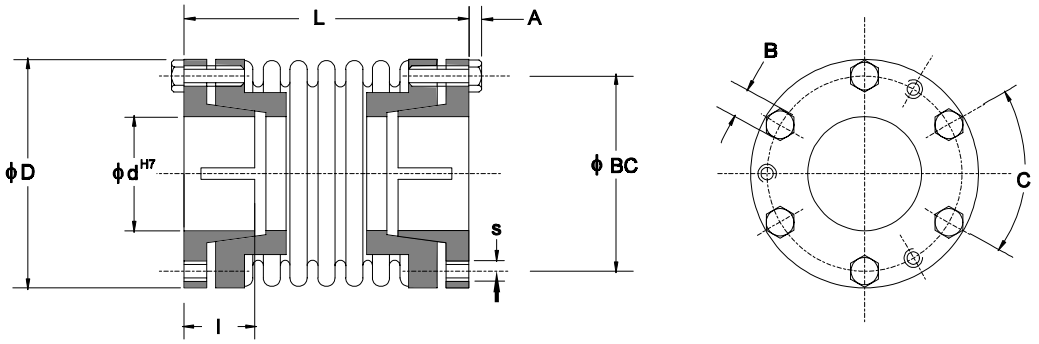

Figure 1

Table of Dimensions

Size	Bore d_{min} mm (in.)	Bore d_{max} mm (in.)	D mm (in.)	L (1) mm (in.)	A mm (in.)	l (1) mm (in.)	s	BC mm (in.)	B mm	C
AL030	9 (.35)	16 (.63)	41 (1.61)	46 (1.81)	2.8 (.11)	21.5 (.85)	2 x M4	30.5 (1.2)	7	4 x 90⁰
AL060	12 (.47)	20 (.79)	50 (1.97)	54 (2.12)	2.8 (.11)	25 (.98)	3 x M4	38 (1.50)	7	6 x 60⁰
AL100	15 (.59)	25 (.98)	60 (2.36)	63 (2.48)	3.5 (.14)	29 (1.14)	3 x M5	47 (1.85)	8	6x 60⁰
AL200	24 (.94)	35 (1.38)	71 (2.80)	72 (2.83)	4.0 (.16)	33 (1.30)	3 x M6	58 (2.28)	10	6 x 60⁰
AL350	30 (1.18)	42 (1.65)	82 (3.23)	81 (3.19)	5.5 (.22)	37 (1.46)	3 x M8	66 (2.60)	13	6x 60⁰
AL600	35 (1.38)	50 (1.97)	98 (3.86)	98 (3.86)	5.5 (.22)	45 (1.77)	4 x M8	80 (3.15)	13	8x 45⁰

(1) Dimensions in untensioned condition

Technical Data

Size	T_n Nm (in-lb)	n_{max} (rpm)	Torsional Stiffness Nm/arc-min (in-lb/arc-min)	Axial Stiffness N/mm (lb_f/ in)	Tightening torque Nm (in-lb)	J kg-cm² (in-lb-sec²)	Weight kg (lb)
AL030	30 (266)	13,000	4.3 (18)	125 (714)	2.9 (26)	.48 ($4.1x10^{-4}$)	.26 (.57)
AL060	60 (531)	11,000	5.5 (49)	110 (628)	2.9 (26)	1.29 ($1.14x10^{-3}$)	.44 (.97)
AL100	100 (885)	9,500	11.1 (98)	135 (771)	5.5 (49)	3.62 ($3.19x10^{-3}$)	.78 (1.72)
AL200	200 (1,770)	9,000	16.3 (144)	200 (1142)	9.5 (84)	7.52 ($6.62x10^{-3}$)	1.12 (2.47)
AL350	350 (3,097)	7,500	37.8 (335)	175 (999)	23 (204)	14.6 ($12.8x10^{-3}$)	1.62 (3.57)
AL600	600 (5,310)	6,300	49.5 (438)	135 (771)	23 (204)	37.5 ($33.0x10^{-3}$)	2.90 (6.39)

Tn = coupling nominal torque
n_{max} = maximum coupling speed
J = mass moment of inertia

THOMSON MICRON
Leading in Motion Control Technology
☎1-888-55-4-MOTION•FAX 516-467-9814•www.thomsonindustries.com

The specifications and data in this publication are believed to be accurate and reliable. However, it is the responsibility of the product user to determine the suitability of Thomson Micron products for a specific application. While defective products will be replaced without charge if promptly returned, no liability is assumed beyond such replacement. © 1998 Thomson Micron, LLC
* Trademark of Thomson Industries, Inc. THOMSON is registered in the U.S. Patent Office and in other

Permissible Shaft Misalignments

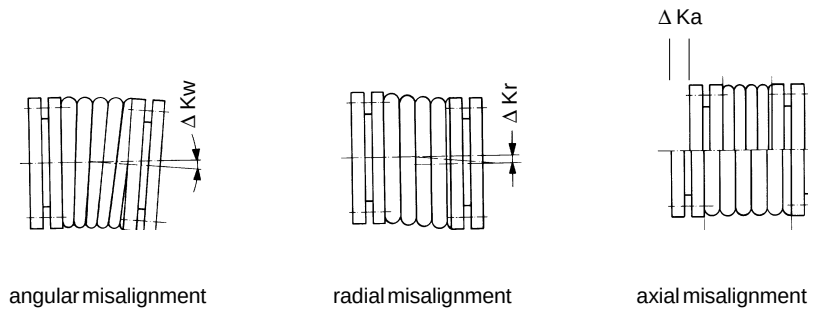

Figure 2

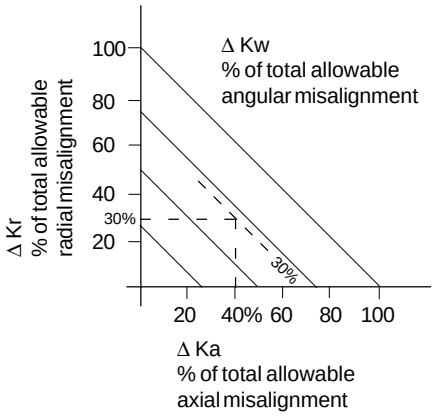

Figure 3

Allowable Shaft Misalignment

The Thomson Micron **AccuLOCK*** Flexible Steel Bellows Coupling compensates radial, axial, and angular shaft misalignment (Figure 2). The maximum permissible shaft misalignments from this table must not be achieved simultaneously or exceed the maximum value. If there are several different misalignment simultaneously, they will influence each other as shown in Figure 3.

Size	Allowable Misalignment		
	Axial mm *(in)*+/-	Radial mm *(in)*	Angular degrees
AL030	.38 *(.015)*	.10 *(.004)*	2
AL060	.48 *(.019)*	.10 *(.004)*	2
AL100	.58 *(.023)*	.15 *(.006)*	2
AL200	.79 *(.031)*	.20 *(.008)*	2
AL350	.99 (.039)	.20 (.008)	2
AL600	1.19 *(.047)*	.30 *(.012)*	2

Ordering

A L 0 6 0 - 0 6 0 - .500

Designates AccuLOCK Coupling

Coupling Size
030 = 30 Nm (266 in-lbs)
060 = 60 Nm (531 in-lbs)
100 = 100 Nm (885 in-lbs)
200 = 200 Nm (1,770 in-lbs)
350 = 350 Nm (3,097 in-lbs)
600 = 600 Nm (5,310 in-lbs)

Specify Shaft Diameter d [2]
(Where $d_{min} < d < d_{max}$)

Specify Mating Shaft Diameter d [2]
(Where $d_{min} < d < d_{max}$)

[2] **When specifying shaft diameter also include units and tolerances when ordering**

The specifications and data in this publication are believed to be accurate and reliable. However, it is the responsibility of the product user to determine the suitability of Thomson Micron products for a specific application. While defective products will be replaced without charge if promptly returned, no liability is assumed beyond such replacement. © 1998 Thomson Micron, LLC
* Trademark of Thomson Industries, Inc. THOMSON is registered in the U.S. Patent Office and in other countries.

Mounting Tools
Micrometer Adjustable Torque Wrench Series

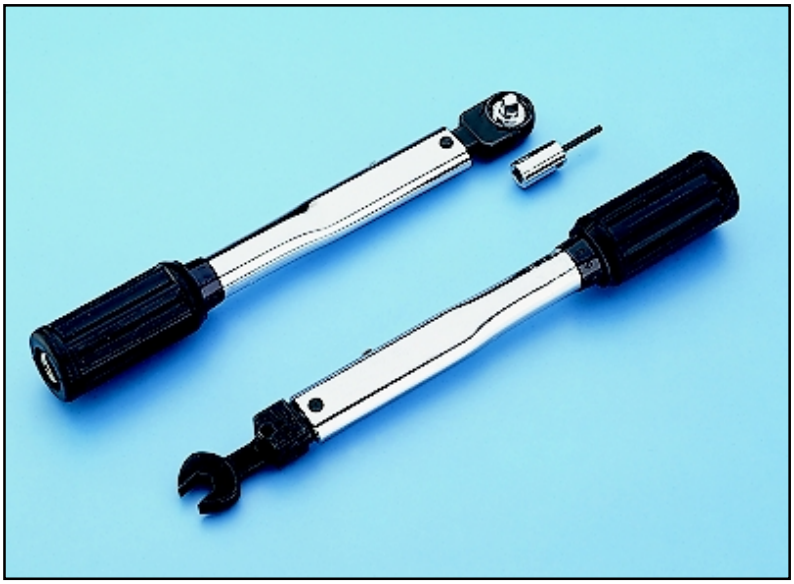

To ensure that the proper torque is applied to the pinion assembly, Thomson Micron offers a complete line of easy to use torque wrenches. To order a torque wrench ask for the corresponding part number along with your order.

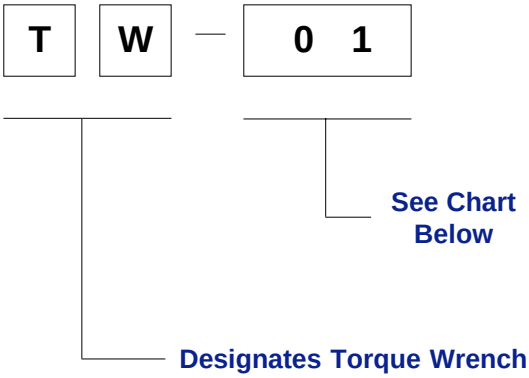

Torque Wrench Ordering Information				
Gearhead Model	Gearhead Frame Size	Motor Shaft Diameter over in (mm)	Motor Shaft Diameter including in (mm)	Torque Wrench Part Number
NemaTRUE *	23	All	All	TW - 23
	34	All	All	TW - 34
	42	All	All	TW - 42
NemaTRUE 90*	23	All	All	TW - 060
	34	All	All	TW - 090
	42	All	All	TW - 115
DuraTRUE* DuraTRUE 90*	60	All	All	TW - 060
	90	All	All	TW - 090
	115	All	All	TW - 115
	142	All	All	TW - 142
AccuTRUE * AccuTRUE 90*	All	.236 (6)	.315 (8)	TW - 01
	All	.315 (8)	1.024 (26)	TW - 02
	All	1.024 (26)	1.890 (48)	TW - 03
UltraTRUE* UltraTRUE 90*	60	All	All	TW - 006
	75	All	All	TW - 075
	100	All	All	TW - 010
	140	All	All	TW - 014
	180	All	All	TW - 018

THOMSON MICRON
Leading in Motion Control Technology
☎1-888-55-4-MOTION•FAX 516-467-9814•www.thomsonindustries.com

The specifications and data in this publication are believed to be accurate and reliable. However, it is the responsibility of the product user to determine the suitability of Thomson Micron products for a specific application. While defective products will be replaced without charge if promptly returned, no liability is assumed beyond such replacement. © 1998 Thomson Micron, LLC
* Trademark of Thomson Industries, Inc. THOMSON is registered in the U.S. Patent Office and in other

Programmable Limit Switches
Fully Adjustable Multi-turn Rotary Switches

Up to 2,048 turn range

Precision: +/– .001 revs
Frame Sizes: 2.5" and 3.5"
Range: up to 2,048 turns

- Electro-mechanical dual cam switches provide repeatable, fail safe performance.
- Up to 12 switches available in a single enclosure.
- Available with integral resolver, encoder, or potentiometer position sensors.

Index Page

PL25 Series....PLS2
PL35 Series....PLS2
Design & Engineering Data....PLS3
Switch Function....PLS3
Performance....PLS3
Mounting....PLS3
Setting Procedure....PLS4
Ordering....PLS5

The specifications and data in this publication are believed to be accurate and reliable. However, it is the responsibility of the product user to determine the suitability of Thomson Micron products for a specific application. While defective products will be replaced without charge if promptly returned, no liability is assumed beyond such replacement. © 1998 Thomson Micron, LLC
* Trademark of Thomson Industries, Inc. THOMSON is registered in the U.S. Patent and Trademark Office and in other countries.

Programmable Limit Switches

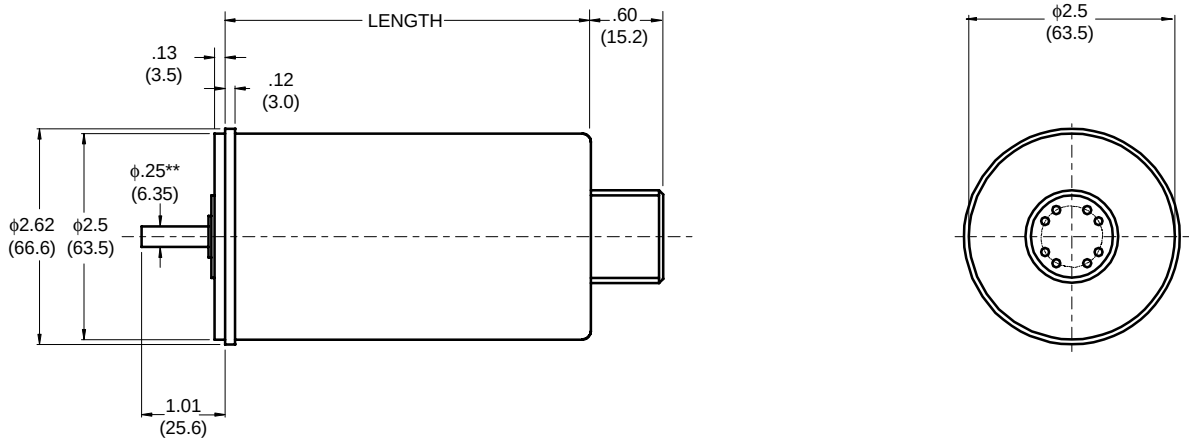

**Input shaft has .240"(6.10mm) flat, .70" (17.8mm) long, 2 places, 90 degrees apart.

All Dimensions are: inches (mm)

PL25 SERIES

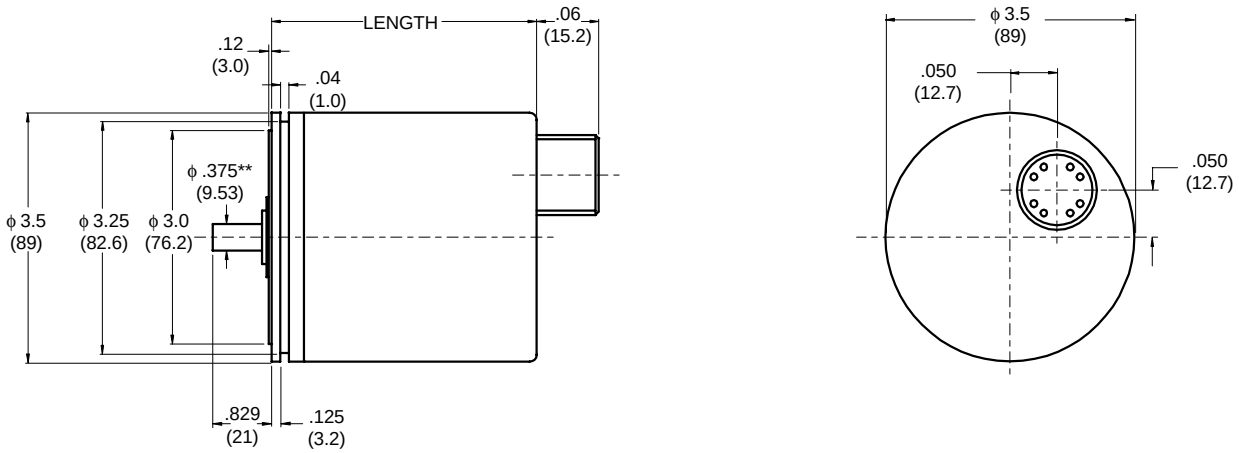

**Input shaft has .360"(9.14mm) flat, .62" (15.7mm) long, 2 places, 90 degrees apart.

All Dimensions are: inches (mm)

PL35 SERIES

Dimensions

2.5 Inch Series

Model	Switches	Length	Connector
25PL2	2	3.7 (94)	10 pin
25PL3	3	4.2 (107)	10 pin
25PL4	4	5.2 (132)	17 pin
25PL5	5	5.2 (132)	17 pin

3.5 Inch Series

Model	Switches	Length	Connector
35PL2	2	3.5 (89)	10 pin
35PL3	3	4.5 (115)	10 pin
35PL4	4	4.5 (115)	17 pin
35PL5	5	4.5 (115)	17 pin
35PL6	6	5.0 (127)	19 pin
35PL7	7	6.6 (168)	35 pin
35PL8	8	6.6 (168)	35 pin
35PL9	9	6.6 (168)	35 pin
35PL10	10	6.6 (168)	35 pin
35PL11	11	6.6 (168)	35 pin
35PL12	12	6.6 (168)	35 pin

THOMSON MICRON™
Leading in Motion Control Technology
☎1-888-55-4-MOTION•FAX 516-467-9814•www.thomsonindustries.com

The specifications and data in this publication are believed to be accurate and reliable. However, it is the responsibility of the product user to determine the suitability of Thomson Micron products for a specific application. While defective products will be replaced without charge if promptly returned, no liability is assumed beyond such replacement. © 1998 Thomson Micron, LLC
* Trademark of Thomson Industries, Inc. THOMSON is registered in the U.S. Patent and Trademark Office and in other countries.

Design & Engineering Data

Purpose
Programmable Limit Switches are employed on automated machinery of all types, to signal and prevent axis overtravel, and to indicate positions along the travel axis, such as home location. Thomson Micron Programmable Limit Switches provide a convienient alternative to trip switches, because they are compact, easy to install, and provide dependable service over a long life.

Design
The unique dual cam design provides a standard range of 512 turns, with no external gearing. A unique differential gearing principle is used to drive each cam pair at slightly different speeds. The cams actuate a miniature snap action switch at the desired set point. The switching action is maintained contact, with normally open and normally closed terminals wired to the connector.

Construction

Base	Aluminum alloy casting, anodized finish
Cover	Aluminum alloy, anodized finish, O ring seals
Shaft	Stainless steel
Gearing	AGMA 12 quality, stainless steel.
Bearings	Stainless steel ball bearings, shielded, lubricated with grease.
Switches	Single pole, double throw
Connector	MIL Spec circular type MS3102

Ratings

Range	Fully adjustable to 512 turns, standard 1024 or 2048 turns, optional
Switches	Rated 5 amps maximum, at 28 volts DC, or 125 / 250 volts AC
Speed	5000 rpm maximum operating
Shaft Loading	Axial 10 pounds maximum Radial 10 pounds at center of input shaft
Environmental	Sealed to NEMA 12 environmental specifications, splashproof

Switch Function
Three types of switches are available:

"A" type switches actuate upon clockwise rotation of the input shaft.
"B" type switches actuate upon counter-clockwise rotation of the input shaft.
"I" type switches are momentary contact type, and produce an impulse signal when actuated in either direction.

Actuation of a switch produces a condition where normally open contacts are closed, and normally closed contacts become open.

Performance
Thomson Micron Programmable Limit Switches are designed to keep up with the demands of today's high performance servo applications. Critical rotating components are machined from stainless steel, and high grade shielded ball bearings are used throughout.

The individual switches can be easily set to any point along the usable range of 512 turns. Subsequent travel to that point will actuate switching within the following parameters:

Repeatability:	+/- 0.5 degrees
Hysteresis:	3 degrees

Mounting
Programmable Limit Switch units are usually mounted into a pilot hole, and clamped down with synchro type clamps which lock into the groove or flange on the base of the unit.
See accessories section below for the mounting kit.

Mounting Dimensions

<u>2.5" Series</u>	
Mounting Pilot	2.501" / 2.503" (63.53mm / 63.58mm) dia.
Bolt Circle for clamps	4-40 thread, 4 places on 2.910" (73.91mm) dia, .25" (6.4mm) min depth.
<u>3.5" Series</u>	
Mounting Pilot	3.001" / 3.003" (76.23mm / 76.28mm) dia.
Bolt Circle for clamps	4-40 thread, 4 places on 3.780" (96.01mm) dia, .25" (6.4mm) min depth.

Accessories

Mounting Kit	includes (4) ea. mounting clamp, screw and lockwasher.
Couplings:	curved beam type flexible couplings are available in many bore sizes and lengths to suit most requirements.
Mating Connectors:	MS type plug with strain relief and sealing gland. Straight and right angle versions are available.

Connector	Fits Models
MC10S - 10 pin straight MC10R - 10 pin right angle	25PL2 25PL3 25PL4 35PL2 35PL3
MC17S - 17 pin straight MC17R - 17 pin right angle	25PL4 25PL5 35PL4 35PL5
MC19S - 19 pin straight MC19R - 19 pin right angle	35PL5
MC35S - 35 pin straight MC35R - 35 pin right angle	35PL series with 7 to 12 switches

The specifications and data in this publication are believed to be accurate and reliable. However, it is the responsibility of the product user to determine the suitability of Thomson Micron products for a specific application. While defective products will be replaced without charge if promptly returned, no liability is assumed beyond such replacement. © 1998 Thomson Micron, LLC
* Trademark of Thomson Industries, Inc. THOMSON is registered in the U.S. Patent and Trademark Office and in other countries.

Limit Switch Setting Procedure

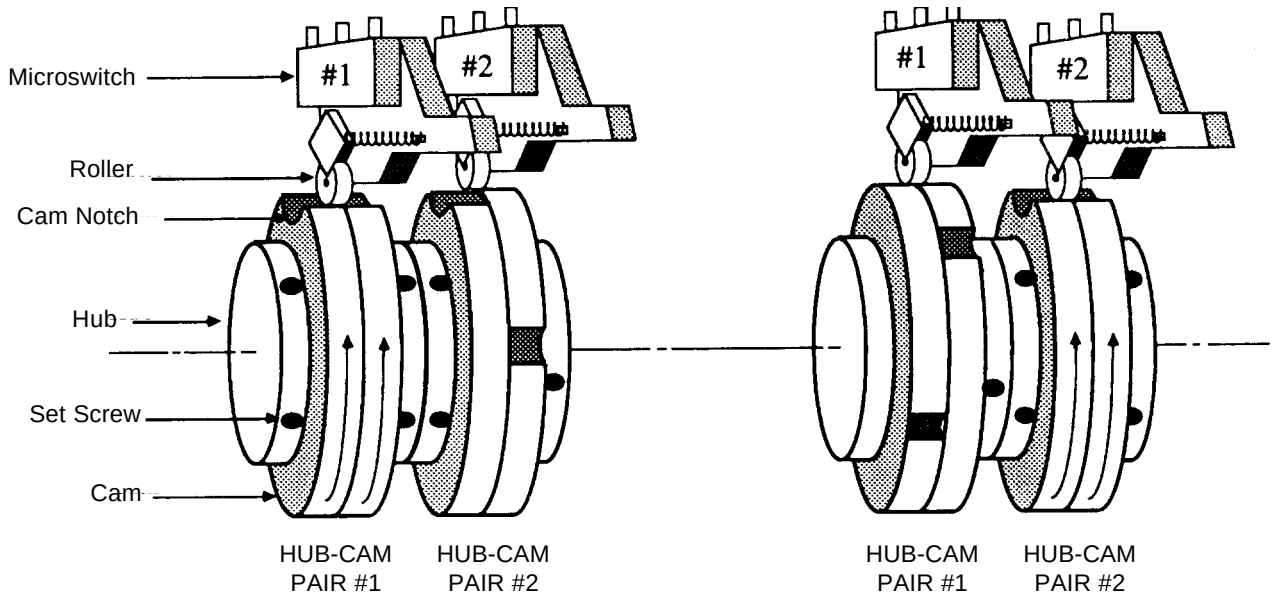

FIG. 1 **FIG. 2**

Limit Switch Setting Procedure

Step 1 Mount limit switch unit with appropriate mounting clamps and flexible coupling.

Step 2 Remove cover. Loosen all hub set screws, (2 per hub) using Thomson Micron cam adjusting wrench.

Step 3 Move axis to required switching point. Align cam notches of Hub-Cam pair under the roller of the desired switch. (See **Fig. 1**, Pair #1 above)

Step 4 Tighten all 4 of the hub set screws on the hub-cam pair. Switch is now correctly set.

Step 5 Repeat above procedure for any additional switches. (See **Fig. 2**, Pair #2 above)

THOMSON MICRON™
Leading in Motion Control Technology
☎1-888-55-4-MOTION•FAX 516-467-9814•www.thomsonindustries.com

The specifications and data in this publication are believed to be accurate and reliable. However, it is the responsibility of the product user to determine the suitability of Thomson Micron products for a specific application. While defective products will be replaced without charge if promptly returned, no liability is assumed beyond such replacement. © 1998 Thomson Micron, LLC
* Trademark of Thomson Industries, Inc. THOMSON is registered in the U.S. Patent and Trademark Office and in other countries.

Ordering

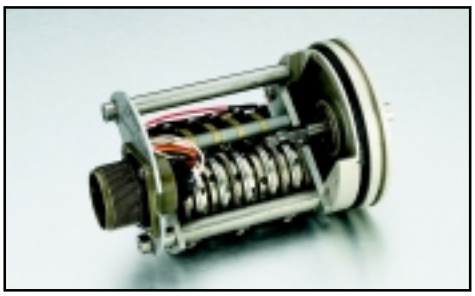

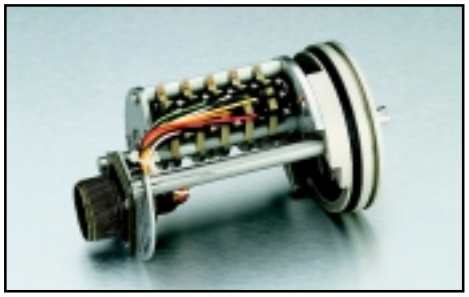

P	L	3	5	–	0	5	–	S	–	S

Call 1-888-55-4-MOTION to order a coupling for your application

Range of Turns
S - standard 512 turn maximum range
1 - 1024 turn maximum range
2 - 2042 turn maximum range

Switch Function Sequence (shaft end to connector end)
NS = Non Standard
S = Standard

# of Switches	Standard Function Sequence 25 Series	35 Series
1	A	A
2	AB	AB
3	AAB	AAB
4	AABB	AB AB
5	AAABB	AB AAB
6	N/A	AAB AAB
7	N/A	A AAABBB
8	N/A	AABB AABB
9	N/A	AABB AAABB
10	N/A	AAABB AAABB
11	N/A	AAABB AAABBB
12	N/A	AAABBB AAABBB

A = clockwise actuation
B = counter-clockwise actuation

Number of Switches
1 - 5 available in 25 and 35 series
6-12 available in 35 series only

Unit Size
25 = 2.5" Diameter
35 = 3.5" Diameter

Programmable Limit Switch

Cam Adjusting Wrench - Spline Key .060" - 6 splines. Part # LSW-060

The specifications and data in this publication are believed to be accurate and reliable. However, it is the responsibility of the product user to determine the suitability of Thomson Micron products for a specific application. While defective products will be replaced without charge if promptly returned, no liability is assumed beyond such replacement. © 1998 Thomson Micron, LLC
* Trademark of Thomson Industries, Inc. THOMSON is registered in the U.S. Patent and Trademark Office and in other countries.

Custom Engineered Solutions

- **Concept to prototype within weeks**
- **Compact integrated servo-actuator solutions**
- **Precision gearing to AGMA 14 standards**
- **State-of-the-art CNC gear cutting capabilities**
- **ISO 9001 certified with in-house product testing and fully accredited metallurgical lab**

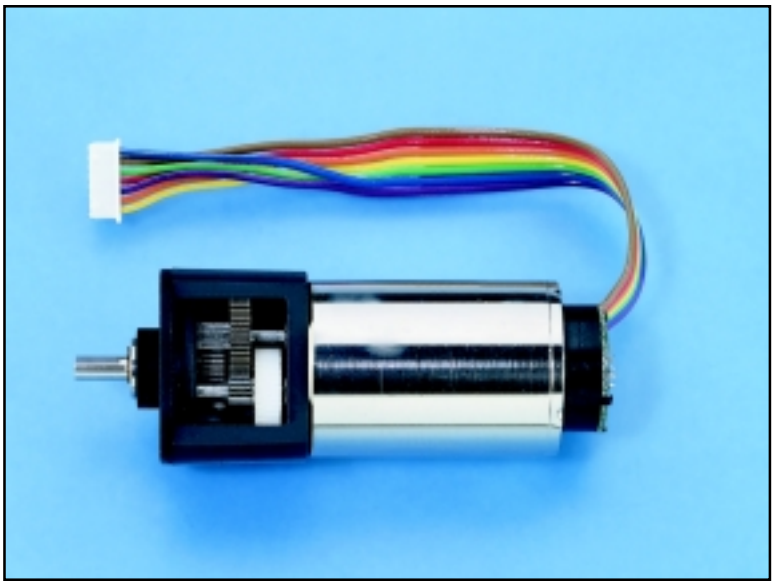

Integral In-line Gearmotors - a precision low noise, highly efficient gearhead is coupled together with an encoder and a brush type permanent magnet DC motor to create a complete drive solution. The innovative material selection of the gearing greatly extends life, increases gearhead efficiency, and eliminates noise.

Thin Profile Gearbox - a parallel shaft spur and helical gearbox which is fully compatible with commonly available "pancake" style disc armature motors. The lightweight aluminum alloy housing encases the 150:1 ratio low noise gearing.

THOMSON MICRON™
Leading in Motion Control Technology
☎1-888-55-4-MOTION•FAX 516-467-9814•www.thomsonindustries.com

The specifications and data in this publication are believed to be accurate and reliable. However, it is the responsibility of the product user to determine the suitability of Thomson Micron products for a specific application. While defective products will be replaced without charge if promptly returned, no liability is assumed beyond such replacement. © 1998 Thomson Micron, LLC
* Trademark of Thomson Industries, Inc. THOMSON is registered in the U.S. Patent and Trademark Office and in other countries.

Spur Gear Differentials - combining differential gearing technology with a position feedback sensor results in this highly sensitive assembly used on windpowered devices to adjust the pitch of the driving wind vanes.

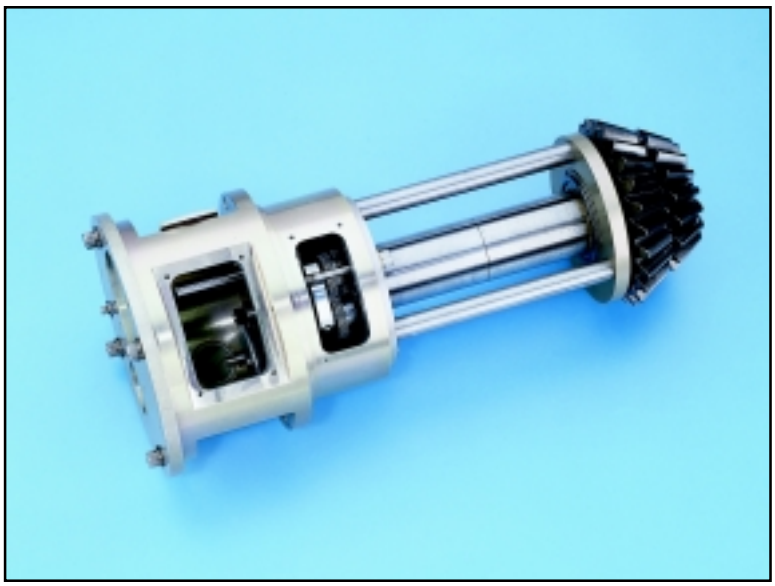

Multi-turn Geared Potentiometer with integral Limit Switches - integrating a potentiometer with programmable limit switches allows positional tracking systems to achieve extremely high levels of accuracy with pre-defined range limits.

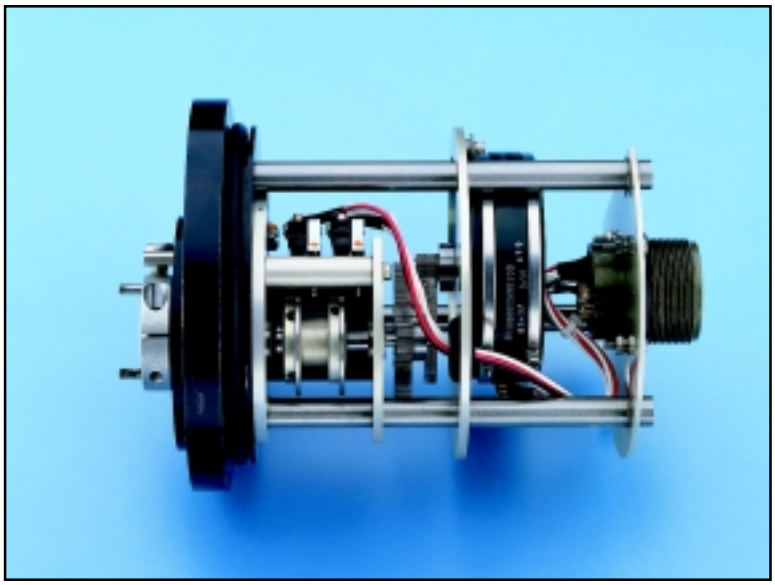

Integral Planetary Gearmotors - by integrating the pinion gear directly on the motor shaft a more compact, higher torque drive assembly can be created.

The specifications and data in this publication are believed to be accurate and reliable. However, it is the responsibility of the product user to determine the suitability of Thomson Micron products for a specific application. While defective products will be replaced without charge if promptly returned, no liability is assumed beyond such replacement. © 1998 Thomson Micron, LLC
* Trademark of Thomson Industries, Inc. THOMSON is registered in the U.S. Patent and Trademark Office and in other countries.

Gearhead Application Analysis Form

General Information

Customer Name: _____ Fax# _____ Order Date: _____

Buyer Contact: _____ Phone# _____ Required Date _____

Technical Contact: _____

Bill to Address: _____ City: _____ State: _____ Zip: _____

Ship to Address: _____ City: _____ State: _____ Zip: _____

e-mail: _____ Web site: _____

Motor Information

Motor Manufacturer: _____ Motor Model# _____

Continuous Torque (in-lb) _____ Peak Torque (in-lb) _____

Maximum speed (rpm) _____

Application Information

Brief description of your application: _____

_____

Acceleration time (sec) _____ Acceleration torque (in-lb) _____ Max speed (rpm) _____

Dwell time (sec) _____ Dwell torque (in-lb) _____ Dwell speed (rpm) _____

Deceleration time (sec) _____ Deceleration torque (in-lb) _____ Min Speed (rpm) _____

Radial Load (lbs) _____ Axial Load (lbs) _____ Target inertia match _____

External load inertia(in-lb-sec^2) _____ Maximum speed of motor (rpm) _____

Ordering Information

Part Number	Quantity	Price	Delivery

Fax back this form to 1-516-467-9814 to receive your quote today!

THOMSON MICRON™
Leading in Motion Control Technology
☎1-888-55-4-MOTION•FAX 516-467-9814•www.thomsonindustries.com

The specifications and data in this publication are believed to be accurate and reliable. However, it is the responsibility of the product user to determine the suitability of Thomson Micron products for a specific application. While defective products will be replaced without charge if promptly returned, no liability is assumed beyond such replacement. © 1998 Thomson Micron, LLC
* Trademark of Thomson Industries, Inc. THOMSON is registered in the U.S. Patent and Trademark Office and in other countries.

Programmable Limit Switch Ordering Information

P	L	3	5	–	0	5	–	S	–	S

Call 1-888-55-4-MOTION to order a coupling for your application

Programmable Limit Switch

Unit Size
25 = 2.5" Diameter
35 = 3.5" Diameter

Number of Switches
1 - 5 available in 25 and 35 series
6-12 available in 35 series only

Switch Function Sequence (shaft end to connector end)
NS = Non Standard
S = Standard

# of Switches	Standard Function Sequence 25 Series	35 Series
1	A	A
2	AB	AB
3	AAB	AAB
4	AABB	AB AB
5	AAABB	AB AAB
6	N/A	AAB AAB
7	N/A	A AAABBB
8	N/A	AABB AABB
9	N/A	AABB AAABB
10	N/A	AAABB AAABB
11	N/A	AAABB AAABBB
12	N/A	AAABBB AAABBB

A = clockwise actuation
B = counter-clockwise actuation

Range of Turns
S - standard 512 turn maximum range
1 - 1024 turn maxumum range
2 - 2042 turn maxumum range

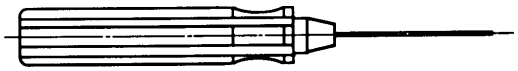

Cam Adjusting Wrench - Spline Key .060" - 6 splines.
Part # LSW-060

AccuLOCK* Flexible Coupling Ordering Information

A L 0 6 0 - 0 6 0 - .500

Specify Mating Shaft Diameter d [2]
(Where $d_{min} < d < d_{max}$)

Specify Shaft Diameter d [2]
(Where $d_{min} < d < d_{max}$)

Coupling Size
030 = 30 Nm (266 in-lbs)
060 = 60 Nm (531 in-lbs)
100 = 100 Nm (885 in-lbs)
200 = 200 Nm (1,770 in-lbs)
350 = 350 Nm (3,097 in-lbs)
600 = 600 Nm (5,310 in-lbs)

Designates AccuLOCK Coupling

[2] When specifying shaft diameter also include units and tolerances when ordering

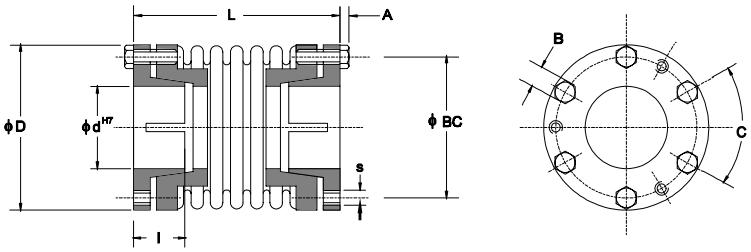

Table of Dimensions

Size	Bore d_{min} mm (in.)	Bore d_{max} mm (in.)	D mm (in.)	L [1] mm (in.)	A mm (in.)	l [1] mm (in.)	s	BC mm (in.)	B mm	C
AL030	9 (.35)	16 (.63)	41 (1.61)	46 (1.81)	2.8 (.11)	21.5 (.85)	2 x M4	30.5 (1.2)	7	4 x 90°
AL060	12 (.47)	20 (.79)	50 (1.97)	54 (2.12)	2.8 (.11)	25 (.98)	3 x M4	38 (1.50)	7	6 x 60°
AL100	15 (.59)	25 (.98)	60 (2.36)	63 (2.48)	3.5 (.14)	29 (1.14)	3 x M5	47 (1.85)	8	6x 60°
AL200	24 (.94)	35 (1.38)	71 (2.80)	72 (2.83)	4.0 (.16)	33 (1.30)	3 x M6	58 (2.28)	10	6 x 60°
AL350	30 (1.18)	42 (1.65)	82 (3.23)	81 (3.19)	5.5 (.22)	37 (1.46)	3 x M8	66 (2.60)	13	6x 60°
AL600	35 (1.38)	50 (1.97)	98 (3.86)	98 (3.86)	5.5 (.22)	45 (1.77)	4 x M8	80 (3.15)	13	8x 45°

[1] Dimensions in untensioned condition

The specifications and data in this publication are believed to be accurate and reliable. However, it is the responsibility of the product user to determine the suitability of Thomson Micron products for a specific application. While defective products will be replaced without charge if promptly returned, no liability is assumed beyond such replacement. © 1998 Thomson Micron, LLC
* Trademark of Thomson Industries, Inc. THOMSON is registered in the U.S. Patent and Trademark Office and in other countries.

Gearhead Ordering Information

DTR	115	–	0	0	5	–				–	RM	MOTOR MODEL

Motor Model Number
the gearhead will be mounting to, or see Catalog No. 1001-98A for a complete motor mounting part number.

Designates Gearhead Type
NT = NemaTRUE
NTR = NemaTRUE 90*
DT = DuraTRUE*
DTR = DuraTRUE 90*
AT = AccuTRUE*
ATR = AccuTRUE 90*
UT = UltraTRUE*
UTR = UltraTRUE 90*
PTR = PowerTRUE 90*

Motor Mounting System
QM = QuickMount*
QMP = QuickMount *PLUS**
SAM = AccuMount* (standard)
OAM = AccuMount* (oversized)
RM = RediMount*

Gearhead Ratio
See Ratio Availability in corresponding gearhead section

Output Options
Special = S
None = Blank

Input Options
Standard mounting system = Blank
Input shaft = 1
Special = S

Gearhead Size
23 = Standard 23 Frame
34 = Standard 34 Frame
42 = Standard 42 Frame
60 = 60mm Frame
75 = 75mm Frame
90 = 90mm Frame
10 = 100mm Frame
115 = 115mm Frame
14 = 140mm Frame
142 = 142mm Frame
18 = 180mm Frame
180 = 180mm Frame

Precision Class

NT	AT & ATR	ALL OTHER
P = 15 arc-min	S = 6 arc-min	BLANK
H = 9 arc-min	U = 4 arc-min	

Torque Wrench Ordering Information

To ensure that the proper torque is applied to the gearhead pinion assembly, Thomson Micron offers a complete line of easy to use torque wrenches. To order a torque wrench ask for the corresponding part number along with your gearhead order.

T	W	–	0 1

See Chart

Designates Torque Wrench

Gearhead Model	Gearhead Frame Size	Motor Shaft Diameter over in (mm)	Motor Shaft Diameter including in (mm)	Torque Wrench Part Number
NemaTRUE *	23	All	All	TW - 23
	34	All	All	TW - 34
	42	All	All	TW - 42
NemaTRUE 90*	23	All	All	TW - 060
	34	All	All	TW - 090
	42	All	All	TW - 115
DuraTRUE* DuraTRUE 90*	60	All	All	TW - 060
	90	All	All	TW - 090
	115	All	All	TW - 115
	142	All	All	TW - 142
AccuTRUE * AccuTRUE 90*	All	.236 (6)	.315 (8)	TW - 01
	All	.315 (8)	1.024 (26)	TW - 02
	All	1.024 (26)	1.890 (48)	TW - 03
UltraTRUE* UltraTRUE 90*	60	All	All	TW - 006
	75	All	All	TW - 075
	100	All	All	TW - 010
	140	All	All	TW - 014
	180	All	All	TW - 018

THOMSON MICRON™
Leading in Motion Control Technology
☎1-888-55-4-MOTION•FAX 516-467-9814•www.thomsonindustries.com

The specifications and data in this publication are believed to be accurate and reliable. However, it is the responsibility of the product user to determine the suitability of Thomson Micron products for a specific application. While defective products will be replaced without charge if promptly returned, no liability is assumed beyond such replacement. © 1998 Thomson Micron, LLC
* Trademark of Thomson Industries, Inc. THOMSON is registered in the U.S. Patent and Trademark Office and in other countries.

Engineering Conversion Factors

Quantity	Conventional		SI Unit	Conversion Factors
	Inch Unit	Metric Unit		
Length	Inch inch	Meter m	Metre m	1 inch = 25.4 mm 1mm = 0.03937 inch 1m = 3.2808 ft 1 ft = 0.3048 m
Area	Square Inch $inch^2$	Square Centimeter cm^2	Square Metre m^2	1 $inch^2$ = 6.4516 cm^2 1cm^2 = 0.155 $inch^2$ 1m^2 = 10.764 ft^2 1 ft^2 = 0.092903 m^2
Mass	Pound Mass lb	Kilogram Mass kg	Kilogram Mass kg	1 lb = 0.45359237 kg 1 kg = 2.2046 lb
Force	Pound Force lbf	Kilogram Force kgf	Newton N	1 lbf = 0.45359237 kgf 1 lbf = 4.44822 N 1 kgf = 2.2046 lbf 1 kgf = 9.80665 N 1 N = 0.1019716 kgf 1 N = 0.224809 lbf
Stress Pressure	Pounds per square inch $lb/inch^2$	Kilogram per square centimeter kgf/cm^2	Pascal N/m^2 (Pa)	1 MPa = 10^6 N/m^2 = N/mm^2 1 kPa = 10^3 N/m^2 1 $lbf/inch^2$ = 0.070307 kgf/cm^2 1 $lbf/inch^2$ = 7.0307×10^{-4} kgf/mm^2 1 $lbf/inch^2$ = 6.8947×10^{-3} N/mm^2 (MPa) 1 kgf/cm^2 = 14.2233 $lbf/inch^2$ 1 kgf/cm^2 = 9.80665×10^{-2} N/mm^2 (MPa)
Torque Work	Inch-Pounds lbf-inch	Kilogram- Meters kgf-m	Newton- Metres Nm	1 lbf-inch = 1.1521 kgf-cm 1 kgf-cm = 0.8679 lbf-inch 1 lbf-inch = 0.1129848 Nm 1 kgf-m = 9.80665 Nm 1 kgf-cm = 9.80665×10^{-2} Nm 1 Nm = 8.85 lbf-inch 1 Nm = 10.19716 kgf-cm
Power	lbf-ft/min	kgf-m/s	Nm/s	1 kW = 1000 Nm/s 1 kW = 60,000 Nm/min 1 kW = 44,220 lbf-ft/min 1 kW = 1.34 hp 1 hp = 75 kgf-m/s 1 hp = 44,741 Nm/min 1 hp = 33,000 lbf-ft/min 1 hp = 0.7457 kW
Velocity	Feet per Second ft/sec	Meters per Second m/sec	Metres per Second m/s	1 ft/sec = 0.3048 m/sec 1 inch/sec = 2.54 cm/sec 1 ft/min = 0.00508 m/sec 1 mile/hr = 0.44704 m/sec 1 km/hr = 0.27777 m/sec 1 mile/hr = 1.609344 km/hr
Acceleration	Feet per Second squared ft/sec^2	Meters per Second squared m/sec^2	Metres per Second squared m/sec^2	1 ft/sec^2 = 0.3048 m/sec^2

The specifications and data in this publication are believed to be accurate and reliable. However, it is the responsibility of the product user to determine the suitability of Thomson Micron products for a specific application. While defective products will be replaced without charge if promptly returned, no liability is assumed beyond such replacement. © 1998 Thomson Micron, LLC
* Trademark of Thomson Industries, Inc. THOMSON is registered in the U.S. Patent and Trademark Office and in other countries.

SAGINAW AND IBL BALL SCREWS
Over 90% efficient in converting rotary motion to linear actuation • Precision accuracies to .0002 in/ft • Five to ten day delivery of standard ball screws

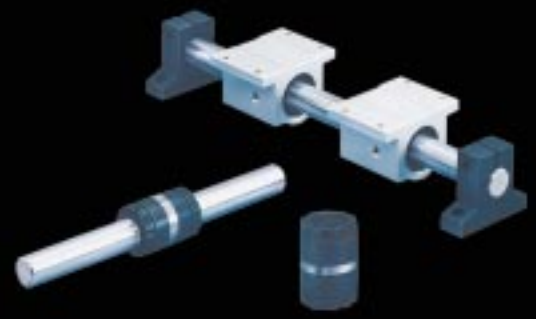

SUPER SMART BALL BUSHING BEARINGS
6X the load capacity of Ball Bushing* bearings • 216X the travel life of Ball Bushing* bearings • Available in all metric and inch sizes • Extend 60 Case* LinearRace* shafting life up to 5 times

60 CASE
High load capacity in a compact envelope • Pre-assembled, ready-to-ship, ready-to-install • Ultra smooth, high speed • linear motion • Bolt-down-from-the-top installation

PERFORMANCE PAK* ACTUATORS
Electromechanical ball screws provide up to 90% efficiency • Combine low energy, high efficiency and precise positioning • Excellent replacement for air and hydraulic cylinders • Custom engineered to meet your stringent requirements even in harsh environments.

MOLDED PRODUCTS
Ideally suited for linear, rotary and oscillating applications • Designed for use in contaminated, washdown or submerged environments • Load capacities up to 12,500 lbf

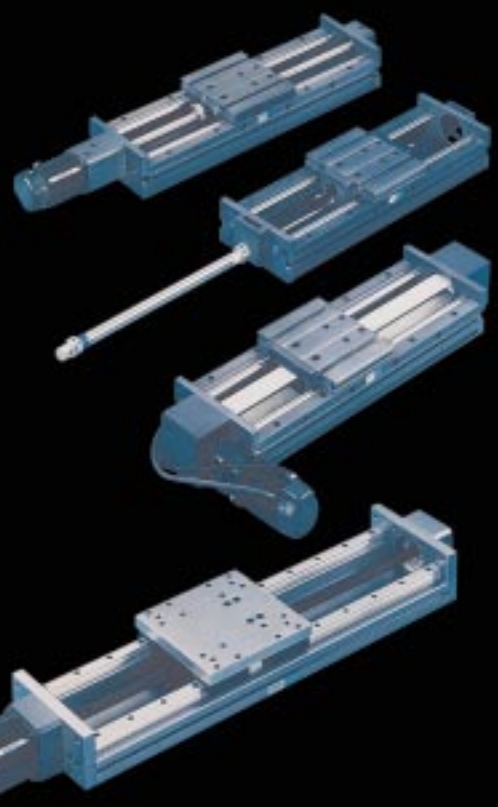

SYSTEMS
Motor actuated ball screw and belt driven slides, stages and systems • Pre-engineered, pre-assembled, ready-to-ship and ready-to-install systems • Saves design and installation time improves accuracy and lowers overall equipment costs

ACCUGLIDE T-SERIES
10X more forgiving to bed imperfections than conventional linear guides • Patented design increases travel life by reducing induced loads from installation imperfections

* Trademark of Thomson Industries, Inc.
THOMSON is registered in the U.S. Patent and Trademark Office and in other countries.
©1998 Thomson Industries, Inc. Printed in the U.S.A. PS
05-11-98 25K AT Con3_9.P65 10-00-000-6001
HAP9702-06.QXD

FOR IMMEDIATE ASSISTANCE:

USA, Canada or Mexico: ☎: 1 (888) 55-4-MOTION
Fax: 1 (516) 467-9814

Internet: www.thomsonindustries.com
E-mail: micron@thomsonmail.com
LinearFax*: 1 (800) 55-4-THOMSON

Europe: ☎: (44) 1271 334 500
Sales Fax: (44) 1271 334 502
UK Free ☎: 0800 9751000
Free Fax: 0800 9751001
France: Free ☎: 0800 905721

Elsewhere: ☎: 1 (516) 467-8000
Fax: 1 (516) 467-9814
or write:
Thomson Micron, LLC
50 Alexander Court
Ronkonkoma, NY 11779 USA

THOMSON™ MICRON, LLC

Thomson Micron, LLC
50 Alexander Court
Ronkonkoma, NY 11779

BULK RATE
U.S. POSTAGE
PAID
PORT WASHINGTON, NY
PERMIT NO. 263